OUTLAW XP MODELS

ZERO-TURN MOWER

OWNER'S, SERVICE & PARTS MANUAL

For additional information, please see us at

www.badboymowers.com

Bad Boy, Inc.
102 Industrial Drive
Batesville, Arkansas 72501
(870) 698-0090

©2014 12-1

TABLE OF CONTENTS

Basic Information..... Section 1 (page 4)

Bad Boy Safety Guidelines ..... Section 2 (pages 5–8)

Operation ..... Section 3 (pages 9)

Maintenance ..... Section 4 (page 10)

Storage and Transportation ..... Section 5 (page 10)

Troubleshooting and FAQ .....Section 6 (page 11)

Controls ..... Section 7 (page 12)

Moving In-operable Mower ..... Section 8 (page 13)

Instrumentation ..... Section 9 (page 13)

Mower Blade Maintenance .....Section 10 (page 14)

Greasing Bearings.....Section 11 (pages 14)

How to choose the right blade .....Page 15

Mowing Tips .....Page 16

SERVICE SECTION BEGINS ON PAGE 17
PARTS SECTION BEGINS ON PAGE 25
LIMITED WARRANTY PAGE 46

This manual applies to the following equipment:

Bad Boy Outlaw XP Series

Outlaw XP 5400 54″ 852cc Kawasaki
Outlaw XP 6100 61″ 852cc Kawasaki
Outlaw XP 7200 72″ 852cc Kawasaki
Outlaw XP 6100 61″ 993cc Vanguard
Outlaw XP 7200 72″ 993cc Vanguard

COMMONLY USED ITEMS AND PART NUMBERS

72″ Blade	Hi-Lift Fusion 038-7230-00	Gator Blade 038-5400-00	Wave Blade 038-7215-00
61″ Blade	Hi-Lift Fusion 038-6080-00	Gator Blade 038-6081-00	Wave Blade 038-6090-00
54″ Blade	Hi-Lift Fusion 038-0001-00	Gator Blade 038-0003-00	Wave Blade 038-5220-00
Deck Belt	72″ 041-0202-00	61″ 041-0178-00	54″ 041-1650-00
Pump Belt	041-5048-00		
Vanguard 993cc	Oil Filter 063-8018-00	Air Filter Inner 063-8020-00	Air Filter Outer 063-8019-00
Kawasaki 852cc	Oil Filter 063-8017-00	Air Filter Inner 063-8020-00	Air Filter Outer 063-8019-00
Motor Oil	10w30 (Reference Engine's Owner Manual)		
Hydro Oil	20w50 (9 quarts)		
Hydraulic Filters	063-8014-00		

SECTION 1: BASIC INFORMATION

Congratulations on the purchase of your new Bad Boy Mower! The purpose of this manual is to assist operators in maintaining and operating their machine. The information and instructions in this manual can help you attain years of performance from your new Bad Boy. Also, check out our website to learn more about the Bad Boy family.

1.1 All Bad Boy engines use 10W30 engine oil. Conventional or Synthetic may be used.
1.2 All Bad Boy hydraulic systems use 20W50 engine oil. Conventional or Synthetic may be used.
1.3 All Bad Boy Mowers use hi-temp multi-purpose grease. NLGI No. 2 for the grease fittings.
1.4 Outlaw models have 12 psi in both front and rear tires.
1.5 Most Briggs, Kohler, Kawasaki, and Vanguard engines hold approximately two (2) quarts of motor oil. Be careful not to over fill engine oil. Refer to the engine's service manual.

Warranty Registration

The Warranty Registration form must be completed and signed to validate your warranty. As the new equipment owner, you are expected to see that the form is completed and forwarded to Bad Boy, Inc., at time of delivery. Warranty is non transferable.

Model/Serial Number

Your Outlaw model serial numbers are found on the SIN plate underneath seat. The serial numbers are necessary on the warranty registration form. Also, these numbers can assist you in the ordering of new parts when replacements become necessary.

Parts/Service

Only Bad Boy replacement parts are to be used on your mower.
Replacement parts are available through your local Bad Boy Mower Dealer. Remember to always provide the following information when ordering parts:

1. Correct part number
2. Correct serial number

All warranty repair and service must be handled through your authorized Bad Boy Mowers dealer.
To locate the nearest dealer, go to our website and click on Locate a Dealer.

EVAPORATIVE EMISSION CONTROL WARRANTY STATEMENT

Federal Evaporative Emission Control Warranty: Your Warranty Rights and Obligations

The Environmental Protection Agency (EPA), and Bad Boy Inc. are pleased to explain the evaporative emission control system's warranty on your 2014 equipment. New equipment that uses spark ignition engines for off-road use must be meet stringent anti-smog standards. The evaporative emission control system on your equipment is designed, built, and equipped so it conforms at the time of sale to the ultimate purchaser with the requirements of 40 CFR 1060. The evaporative emission control system is free from defects in materials and workmanship that may keep it from meeting said requirements. Bad Boy Inc. must warrant the evaporative emission control system on your equipment for two years provided there has been no abuse, neglect or improper maintenance. If an evaporative emission control system component does fail in a manner that would cause the equipment to no longer meet the requirements of 40 CFR 1060 within the first two years Bad Boy Inc. will replace the defective component. Your evaporative emission control system may include parts such as fuel tanks, fuel lines, carbon canisters, fuel caps, valves, vapor hoses, clamps, or connectors.

SECTION 2: MOWER SAFETY GUIDELINES

Never allow untrained people to operate this machine. It is the owner's responsibility to get training and see to it that anyone who has permission to use your machine receives the proper training. Do not mow around people. The factory discharge chute is designed to deflect debris downward, but it could be possible for debris to be thrown in a way that can cause damage to people or property. Seek additional training when possible to learn more about safety techniques and practices. **This cutting machine is capable of amputating hands and feet and throwing objects. Failure to observe the following safety instructions could result in serious injury or death.**

GENERAL OPERATION

2.1 Read, understand, and follow all instructions on the machine and in the manual before starting.

2.2 Do not put hands or feet near rotating parts or under the machine. Keep clear of the discharge opening at all times.

2.3 Always remain seated while operating the machine. If the machine is equipped with Roll Over Protection (ROPs), always buckle your seat belt.

2.4 Only allow responsible adults who are familiar with the instructions to operate this machine.

2.5 Clear the area of objects such as rocks, wire, toys, etc., which could be thrown by the blades.

2.6 Always maintain a safe distance from people and pets just prior to, and during, operation. Stop the machine if anyone enters the area.

2.7 Never carry passengers.

2.8 Do not mow in reverse unless absolutely necessary. Always look down and behind before and while backing.

2.9 Never direct discharged material toward anyone. Avoid discharging material against a wall or obstruction as material may ricochet back toward the operator. Stop the blades when crossing gravel surfaces.

2.10 Never operate the machine without the discharge chute, grass catcher, or other safety devices correctly in place and functioning properly.

2.11 Slow down before turning.

2.12 Always disengage blades, place steering controls in neutral, engage parking brake, and remove ignition key when leaving operators seat. Never leave a running machine unattended.

2.13 Disengage blades when not mowing. Shut off engine and wait for all parts to come to a complete stop before cleaning the machine, inspecting the machine for damage, removing the grass catcher, or unclogging the discharge guard.

2.14 Always operate machine in daylight or with adequate working lights.

2.15 Do not operate the machine while under the influence of alcohol or drugs.

2.16 Watch for traffic when operating near or crossing roadways.

2.17 Always wear eye protection when operating or servicing the machine.

2.18 Always wear ear protection, such as earplugs, while mowing.

2.19 Use extra care when loading or unloading the machine into a trailer or truck.

2.20 Be alert of surroundings. Watch for rocks, stumps, mounds, depressions, and low hanging limbs or objects that could be potentially hazardous while mowing.

2.21 Data indicates that operators 60 years of age and above are involved in a large percentage of riding mower related injuries. These operators should periodically evaluate their ability to operate the riding mower safely enough to protect themselves and others from serious injury.

SLOPE OPERATION

Slopes are a major factor related to loss of control and tip over accidents, which can result in severe injury or death. Operation on all slopes requires extra caution. If you cannot back up the slope, or you feel uneasy on it, do not mow it.

2.22 Mow up and down slopes, not across.

2.23 Watch for holes, ruts, bumps, rocks, or other hidden objects that tall grass can obscure. Uneven terrain could overturn the machine.

2.24 Choose a low ground spend when operating the machine on a slope.

2.25 Do not mow on wet grass, the tires may lose traction.

2.26 Do not attempt to coast down a slope in the neutral position.

2.27 Avoid starting, stopping, or turning on a slope. If the tires lose traction, disengage the blades and proceed slowly, straight down the slope.

2.28 Keep all movement on slopes slow and gradual. Sudden changes in speed or direction could cause the machine to roll over.

2.29 Use extra care while operating machine with grass catchers or other attachments: they can affect the stability of the machine. Do not use on steep slopes.

2.30 Do not try to stabilize the machine by putting your foot on the ground.

2.31 Do not mow near drop offs, ditches or embankments. The machine could suddenly roll over if a wheel goes over the edge or the edge caves in.

2.32 Be aware of what is located at the bottom of slopes. For example: rocks water, cliffs, and roadways.

CHILDREN

Tragic accidents can occur if the operator is not alert to the presence of children. Children are often attracted to the machine and the mowing activity. NEVER assume that children will remain where you last saw them.

2.33 Keep children out of the mowing area and in the watchful care of a responsible adult other that the operator.

2.34 Maintain alertness and turn machine off if a child enters the area.

2.35 Before and while backing, look behind and down for small children.

2.36 Never carry children, even with the blades shut off. They may fall off and be seriously injured or interfere with safe machine operation. Children who have been given rides in the past may suddenly appear in the mowing area for another ride and be run over or backed over by the machine.

2.37 Never allow children to operate the machine.

2.38 Never leave key in the ignition, especially around children.

2.39 Use extreme care when approaching blind corners, shrubs, trees, or other objects that may block your view of a child.

TOWING

2.40 Tow only with a machine that has a hitch specifically designed for towing. Do not attach towed equipment except at the hitch point.

2.41 Follow the manufacturer's recommendation for weight limits for towed equipment and towing on slopes.

2.42 Never allow children or others in or on towed equipment.

2.43 On slopes, the weight of the towed equipment may cause loss of traction and loss of control.

2.44 Travel slowly and allow extra distance to stop.

SERVICE:

SAFE HANDLING OF GASOLINE

To avoid personal injury or property damage, use extreme care in handling gasoline. Gasoline is extremely flammable and the vapors are explosive.

2.45 Extinguish all cigarettes, cigars, pipes, and all other sources of ignition.

2.46 Use only an approved gasoline container.

2.47 Never remove gas cap or add fuel with the engine running.

2.48 Allow engine to cool before refueling.

2.49 Never fuel the machine indoors.

2.50 Do not store machine near open flame or source of ignition, such as a water heater or furnace.

2.51 Remove gas powered equipment from the truck or trailer and refuel it on the ground. If this is not possible, then refuel such equipment with a portable container, rather than from a gasoline dispenser nozzle.

2.52 Never fill gasoline containers inside a vehicle or on a truck or trailer bed with a plastic liner. Always place containers on the ground away from your vehicle before filling.

2.53 Keep the nozzle in contact with the rim of the fuel tank or container opening at all times until the fueling is complete. Do not use a nozzle lock-open device.

2.54 If fuel is spilled on clothing, change clothing immediately.

2.55 Never overfill fuel tank. Replace gas cap and tighten securely.

GENERAL SERVICE

2.56 Never operate machine in a closed area where dangerous carbon monoxide fumes can collect.

2.57 Keep all nuts and bolts tight to be sure the equipment is in safe working condition. Never operate a poorly maintained machine.

2.58 Do not touch hot areas of the machine.

2.59 Never interfere with the intended function of a safety device or reduce the protection provided by a safety device. Check their proper operation regularly.

2.60 Keep the entire machine free of grass, leaves, or other debris build up. Clean up oil or fuel spillage and remove any fuel soaked debris. Failure to do so can affect the safety and functionality of the machine, as well as increase the danger of a fire due to contact with the hot surfaces of the machine.

2.61 Allow machine to cool before storing.

2.62 If you strike something with the mower, turn the mower and blades off, engage the parking brake, and inspect the machine for damage. Repair, if necessary, before resuming.

2.63 Never make any adjustments or repairs with the engine running.

2.64 Check grass catcher components and the discharge guard frequently and replace with manufacturer's recommended parts, when necessary.

2.65 Mower blades are sharp. Wrap the blade or wear gloves before servicing them.

2.66 Check parking brake operation frequently. Adjust and service as required.

2.67 Maintain or replace safety and instruction labels, as necessary.

2.68 Do not attempt to mount a tire without the proper equipment and experience to perform the job.

2.69 Always maintain the correct tire pressure. Do not inflate the tires above the recommended pressure. Never weld or heat a wheel and tire assembly. The heat can cause an increase in air pressure resulting in a tire explosion. Welding can structurally weaken or deform the wheel.

2.70 Park machine on level ground. Never allow untrained personnel to service machine. Understand service procedure before doing work.

SAFETY INTERLOCK SYSTEM

Your Bad Boy mower is equipped with a safety interlock system. This system is designed to prevent serious injury or death to the operator and other people or property damage. The system consists of an operator presence switch in the seat, the parking brake, drive lever neutral position, the mower blade engagement switch, and the ignition switch.

These interlocks are vitally important and must be tested frequently. Following are instructions to test these very important safety precautions. **Note: the operator must be seated properly on the machine during these tests and the engine should have been previously allowed to warm to operating temperature.**

2.71 With the parking brake engaged, bring lever arms to their inward position, then attempt to start the machine (the blade actuator should be in off position); the engine should not start.

2.72 On a level surface, disengage the parking brake and place lever arms to their outward position, then attempt to start the machine (the blade actuator should be in off position); the engine should not start.

2.73 Engage parking brake and leave lever arms in outward position, put blade actuator in the on position, then attempt to start the machine; the engine should not start.

2.74 Next, start the engine as stated in the “Mower Operation Section”, disengage parking brake, and Very Slowly begin to rise from the seat; the engine should stop.

If any of these tests fail to produce the results indicated and the problem cannot be identified, contact your Bad Boy Mower dealer or the support contacts in the rear of this manual.

ROLL OVER PROTECTION STRUCTURES (ROPS)

If your machine is equipped with ROPS, it is of utmost importance they are used properly. ROPS, when used correctly, dramatically decrease the fatality rate in instances when the machine overturns.

2.75 Periodically ensure the bolts that attach the ROPS to the machine are securely fastened.

2.76 Always operated the machine with the ROPS secured in the upright position.

2.77 If the surrounding environment (e.g. low lying limbs, signage, etc.) makes it impossible to mow with the ROPS upright, lower the ROPS at the hinge point, mow the area, then immediately secure the ROPS upright.

2.78 Upright ROPS are taller than then operators head. Be aware of this and your surrounding environment, as referenced above. The mower and operator may clear low lying items, but the ROPS may not.

2.79 Always wear the provided seat belt when ROPS are utilized. Failure to use the seat belt severely handicaps the safety benefits of the ROPS.

2.80 In the event of a roll-over, replace the ROPS before resuming use of the machine.

SECTION 3: MOWER OPERATION

Never operate the machine with faulty equipment. Always be alert of sudden changes in landscape, as the mower will react differently on slopes or embankments than it will on flat surfaces. Never operate the mower with the discharge chute open. Do not cross terrain, other than grass, with blades turning. This could cause damage to property or bystanders.

3.1 Place parking brake in up position

3.2 Drive arms must be in the “open” position. While sitting on the machine, each arm is positioned away from the operator, to the right and left. Drive arms will lock into place and must be in this position to start machine.

3.3 Put PTO switch in the OFF position.

3.4 If your machine has been equipped with a ROPS (Roll Over Protection System) then you must fasten seatbelt.

3.5 If machine has not been started recently, engage the choke.

3.6 Make sure nothing is under or around machine.

3.7 Place key in ignition and turn.

3.8 Once machine is started, disengage the choke.

3.9 Increase RPM by sliding the throttle to fast position, toward the rabbit.

3.10 Owners must become familiar with the controls before operating a zero-turn radius vehicle.

3.11 Start slowly and build your skill level. Have ample practice before using the machine at full capabilities.

3.12 Be comfortable with machine before engaging blades. Know what each component controls before using machine.

3.13 Your mower will perform differently on an incline /decline. Be cautious, slow down, and do not make any sudden jerking movements with control arms. The machine could lose traction on a decline or tip backwards on an incline.

3.14 Once you become comfortable with your Bad Boy Mower you will notice your overall mowing time will decrease.

Avoid operating your mower on side hills of over 5 degrees,
inclines of over 10 degrees,
and declines of over 15 degrees.

SECTION 4: MOWER MAINTENANCE

***Check each and provide maintenance when needed.*

DAILY

4.1 Check Engine Oil

4.2 Check Engine Air Filter

4.3 Tire Pressure

4.4 Inspect Blades

Within FIRST five hours of usage, change engine oil and filter

EVERY 30 HOURS OF USAGE

4.5 Grease Machine

EVERY 50 HOURS OF USAGE

4.6 Change Engine Oil and Filters

Check filters once a year if under 50 hours

Check air and fuel filters more often in dry, dusty conditions

Within FIRST 50 hours of usage, change hydraulic oil and filters

EVERY 250 HOURS OF USAGE

4.7 Change Hydraulic Fluid and Filters

4.8 Refer to manufacturer manual for specific information on maintenance schedules.

SECTION 5: MOWER STORAGE & TRANSPORTATION

5.1 Keep machine from collecting debris by storing in a covered area while not in use.

5.2 Fuel can harm your machine if left for more than 30 days without changing, especially if the fuel contains ethanol. Never use fuel with more than 10% ethanol by volume. E-15 is not permitted.

5.3 Disconnect the negative battery cable when machine will be stored for more than 30 days.

5.4 Always secure machine properly when transporting machine.

5.5 Do not load machine on trailer with blades engaged.

5.6 Do not use ramps to load the machine.

5.7 Make sure Parking Brake is in “up” position.

5.8 In wet conditions tires may spin while loading / unloading. If necessary, wait for dry conditions before loading / unloading.

5.9 Make sure mode of transportation is suitable to bear the weight of mower.

5.10 Deck height should be set at maximum before attempting to load.

5.11 Secure mower with at least two straps capable of securing weight of mower.

SECTION 6: TROUBLESHOOTING

6.1 **Q:** ***How do I prevent an uneven cutting pattern and increase the quality of cut?***

6.1 **A:** Check tire pressure, check blade sharpness (replace blades or sharpen at least once per year or when needed), make sure blades are tightened properly, check spring and belt tension, check the underside of the deck to ensure the mower deck is free of grass build-up and debris, make sure your machine is at full throttle, and vary your mowing pattern each time you cut your grass.

6.2 **Q:** ***What should I do if my mower won't start?***

6.2 **A:** Check battery charge and connection (grounds), check your fuel (make sure fuel is less than 30 days old and contains no water), make sure your spark plug is in good condition and spark plug wire is attached, and make sure air filter is clean (a dirty filter makes it more difficult for the engine to draw air). Check for broken wires or bad connections.

6.3 **Q:** ***What should I do if the blades won't engage?***

6.3 **A:** Make sure the safety switch is plugged in on the bottom of seat. Check the underside of the PTO engager to ensure the plug is secure at switch. Also check PTO fuse underneath operator console (10amps)

6.4 **Q:** ***What type of fuel is recommended for my mower?***

6.4 **A:** We recommend that you use a name brand fuel to ensure quality. Use fuel with an octane rating near 87. Higher octane fuels offer no benefit. Only fuels with an ethanol content of 10% or less may be used. E-15 is not permitted.

6.5 **Q:** ***Do you offer touch-up paint for your mowers?***

6.5 **A:** Touch-up paint is available. Contact your local dealer for more information.

6.6 **Q:** ***How durable is the electric deck lift?***

6.6 **A:** The actuator which controls the deck height is designed for moving loads of up to 1000 pounds and has a static holding capability which exceeds 3,000 pounds. Our ¼˝ deck weighs approximately 250 pounds which is only 25% of working capability. If deck lift will not operate, check fuse located underneath operator console (15amp).

SECTION 7: CONTROLS

7.1 **Ignition Switch**—Bad Boy Mowers have a three position ignition switch: off, run, and start. With key inserted, rotate it clockwise to START position and release key when engine starts, and switch will automatically return to he RUN position.

7.2 **Throttle Control**—A cable is connected to the engine throttle for controlling engine speed. Move lever forward to increase engine rpm, move lever backward to decrease engine rpm.

7.3 **Choke Control**—A cable is linked to manually operate the engine choke. When the lever is in the down position, the choke is in the off (run) position. When the lever is pulled up, the choke is in the on (start) position. Do not operate the machine in the on (start) position. The choke lever is behind the throttle control.

7.4 **Control Levers**—These levers control the mower's speed, direction, and neutral lock. These levers are used to steer, accelerate, decelerate and change direction. (Drive Arms)

7.5 **Blade Engage Switch**—This switch engages the blades. Pull the switch up to engage the blades and push the switch down to disengage the blades.

7.6 **Deck Height Adjust**—XP has a rocker switch for deck height adjustment.

SECTION 8: MOVING INOPERABLE MOWER

8.1 Do not tow machine. Use a winch to load on a trailer for transporting.

8.2 **ATTENTION:** RETURN BYPASS VALVES TO OPERATING POSITION BEFORE RUNNING MOWER FOLLOWING REPAIRS.

8.3 If it is necessary to move mower when the engine is inoperable, the hydraulic drive pumps are equipped with bypass valves. Before moving the mower, turn the bypass valves counterclockwise one-half to one revolution. The valve stems on each pump are located near the top and are identified as a hex stud.

8.4 Your Bad Boy Mower Weighs: ***OUTLAW XP SERIES:*** ***1180—1310 lbs***

**** Weights fluctuate with the addition of accessories.*

8.5 As you can see by the weights of the machines, you shouldn't ever try to push or pull a Bad Boy Mower by hand. This could cause serious bodily injury.

8.6 Hopefully, you'll never need to use this section of the manual. However, if you do, use extreme caution when moving machine!

SECTION 9: INSTRUMENTATION

9 .1 **Electronic Hour Meter**—Registers Hour increments up to 9,999.9 total hours. This meter records the cumulative time the engine is running.

SECTION 10: MOWER BLADE MAINTENANCE

10.1 Check mower blades after each use. This is essential for maintaining well-groomed turf. Keep the blades sharp. If a dull blade is used for cutting, the grass will tear rather than cut. This could damage the grass leaving a brown frayed top on the grass within a few hours. A dull blade will also require more power from the engine.

10.2 NEVER attempt to straighten a bent blade by heating. NEVER attempt to weld a cracked blade. The blades can break and cause serious injury or death.

10.3 NEVER work with blades while engine is running or deck clutch is engaged.

10.4 ALWAYS place deck clutch in DISENGAGE position while performing maintenance.

10.5 Use blocks when you MUST work under mower.

10.6 ALWAYS wear thick gloves when handling blades.

10.7 ALWAYS check for blade damage if mower strikes rock, branch, or other objects that could potentially damage the blade.

(REMEMBER: NEVER CHECK BLADE WHILE ENGINE IS ON!

NEVER CHECK BLADES WHILE BLADES ARE ENGAGED!)

SECTION 11: GREASING THE BEARINGS

11.1 Park the machine on a level surface and disengage the blade control switch.

11.2 Move the motion control levers outward to the neutral position, engage parking brake, stop the engine, remove the key, and wait for all moving parts to stop before leaving the operating position.

11.3 Grease Type: NGLI grade #2 multi-purpose gun grease. Grease the front caster pivots.

11.4 Clean the grease fittings with a cloth. Scrape any paint off the front of the fitting(s).

11.5 Connect a grease gun to each fitting. Pump grease in fittings until grease begins to seep out of the bearings. Wipe up excess grease.

11.6 Refer to service manual section for grease fitting locations.

HOW TO CHOOSE THE RIGHT BLADE

Essentially there are only TWO basic styles of mowing blades used or approved for use on our current products:

1) The standard style of mowing blade is essentially designed for cutting grass and effectively discharging the clippings out from the deck to fall onto the lawn or to be captured in a grass collection system. Standard blades are also referred to as “2-in-1” (discharging & bagging) or “high-lift” blades (because they are designed to create a higher-lifting airflow).

2) Mulching blades generally have a more curved style surface and frequently include extra cutting surfaces along the blade edges. These blades may also come in a “+” design (which is actually two individual blades arranged in a perpendicular fashion to enhance mulching). The “+” blades are usually found on older style mowers; newer ones utilize blades with more advanced mulching technology. Mulching blades may also be referred to as “3-in-1” (mulching, discharging & bagging) or “all-purpose” blades.

Bear in mind that the re-circulating airflow design of 3/1 blades makes them less efficient at discharging grass clippings than a standard 2/1 blade. As with most all-purpose tools, there is some give and take as opposed to using a tool designed for a more specific purpose.

If you’re experiencing less-than-desired cutting or discharging performance with a 3/1 blade, you may want to check into using a 2/1 blade. Conversely, if you’re using a 2/1 blade and want to mulch clippings, you should see about the availability of mulching blades or a mulching kit.*

The type of blade installed on a new mower is a decision the retailer makes for each model of mower, based on the expected needs of most customers. If you’re unsure of which blade is on a particular model, inspect the blade. Blades have part numbers stamped into them. Then compare these part numbers with the unit’s Operator’s Manual or Parts List.

It is true there are many other styles of blades available. But since we don’t manufacture or recommend using these other aftermarket styles, we will leave them out of this discussion. Should you want more information on special application or aftermarket blades, you should contact the companies that make these products. NOTE: Customers using non-OEM blades do so at their own risk. The use of unapproved (non-OEM) blades may void any or all of the mower and engine factory warranties.

**** MULCHING KITS*** – These generally consist of mulching blades and a mulching plug (which closes off the discharge opening to keep the clippings contained under the deck for re-cutting) plus any necessary hardware for installation. Please check with your parts distributor regarding the contents of a particular mulching kit.

MOWING TIPS:

- Mow header strips at the ends of the lawn and around flower beds first. Make them wide enough that you can turn the mower around in the already mown section. Then mow back and forth between these header strips overlapping each lap by about 1/8 the width of the mower's deck.
- Don't cut your grass too short, particular for cool season grasses. Higher heights usually provide for a deeper root system, looks better, and is less likely to have weeds invading, particularly crabgrass.
- Don't remove any more than one third of the grass leaf at any one cutting. If circumstances arise that a lawn gets too tall and you just have to lop off a bunch to get caught up, bite the bullet and break it down into several mowings to get caught up with 3 or so days between cuttings.
- **NEVER SCALP YOUR LAWN.** Scalping severely damages the root system to such a degree that it may die.
- Avoid mowing when the grass is wet or when it's dark
- Avoid throwing grass clippings into the street and driveway where they can be washed into the sewer system. After mowing, clean up driveway and walkways.
- When mowing remove only a third with each cutting (except for the first mowing of the season when it's ok to remove more). You can safely leave clippings that will quickly decompose and add nutrients back into the soil. Contrary to popular opinion, grass clippings do not add to thatch buildup. Grass blades are made up of about 75% water.
- Mow your lawn in a different direction with each mowing, especially with lawns of shorter grass types. Altering the direction ensures a more even cut since grass blades will grow more erect and less likely to develop into a set pattern.
- Keep your mower's blade sharp, which means having it sharpened several times during the mowing season. Keep several blades around so you'll always have a sharp one on hand. Sharp blades cut the grass cleanly and help mulch clippings into small pieces which break down quickly.
- Don't forget to change your mower's oil at least once during the mowing season. For brand new mowers, change the oil after about 5 hours of operation during the initial break-in period.
- At the end of the mowing season use a fuel stabilizer in the remaining gasoline
- In the spring, don't use that old gas unless you properly used a fuel stabilizer, it can cause a number of problems. Better to use fresh gasoline to begin the new mowing season.
- **Leaf blade A** demonstrates what a leaf blade should look like after mowing with a sharp blade.
- **Leaf blade B** demonstrates a leaf blade that was injured by a dull mower blade.
- **Leaf blade C** was cut by the mower but indicates that the mower blade is not sharp enough. The shredded white tissue protruding from the leaf blades C and D is the vascular tissue of the plant.

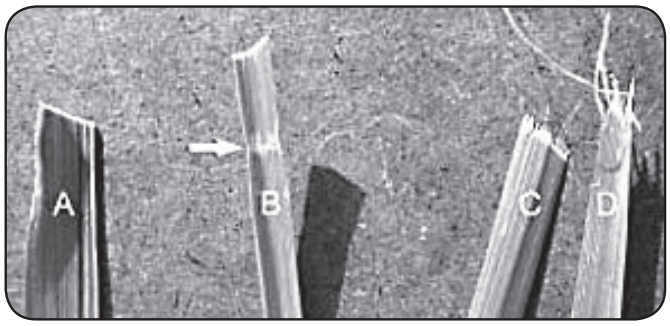

- **Leaf blade D** has been mown for quite some time with a dull mower blade.

To bag or mulch?

Grass clippings do not contribute to thatch buildup or increase the chances of disease. If you mow your lawn at the right height, without removing any more than 1/3 of it's total height, clippings will quickly breakdown without a trace. These clippings contribute additional nitrogen and other nutrients to the soil and supply it with additional organic materials. Clippings from a 1000 sq. ft. lawn can add as much as 1 - 2 pounds of nitrogen back into the soil.

If you have a compost pile, then you may want to bag your clippings occasionally to add much needed green-matter to the compost pile. Make sure it is mixed thoroughly with brown matter to avoid a strong ammonia odor. **DO NOT COMPOST CLIPPINGS** after applying any weed control or weed-feed type product. Before adding clippings to the compost pile wait at least 3 mowings after these products have been applied.

SERVICE SECTION

SECTION 1: HYDROSTATIC SYSTEM

To change hydro oil on the Outlaw XP, remove oil return lines from side of hydro tank and place them in a disposable oil container. Start and run mower until oil level is reduced down to about 2˝ of oil remaining in the tank. Do not allow air to enter the oil lines in the bottom of the tank. Keep in mind that only about 75% of the hydro oil can be changed at a time. Use only 20w50 motor oil in the hydro system. (Conventional or synthetic oil may be used) Bad Boy recommends that the hydro oil and filters be changed within the first 50 hours of usage and every 500 hours thereafter or once a year. (Approximately 4 quarts to re-fill system)

Change hydro oil filters by unscrewing them from the filter head. Fill new filters with 20w50 motor oil before installing. Use only Bad Boy replacement filters. Using any other filter will result in damage to the hydro system and void the warranty.

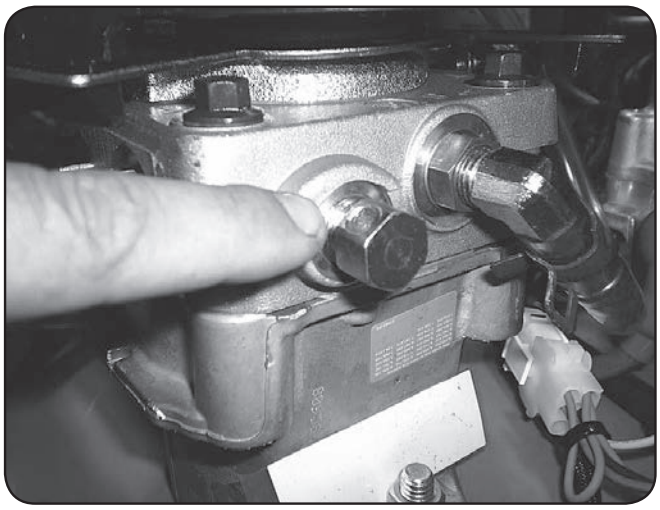

Once the system is refilled with oil, lift rear of mower until tires are off the ground. Start engine, release parking brake, stay clear of moving rear tires, loosen bypass bolt ½ to ¾ turns, move drive arms forward and backward 4 to 6 times slowly. This will purge the air from the system. (the bypass bolt has a hole drilled through the side of the bolt head). This valve also serves as a neutral for moving the mower without the engine running.

SECTION 2: DRIVE BELT

Shown above is a typical pump belt tensioner for Outlaw models.

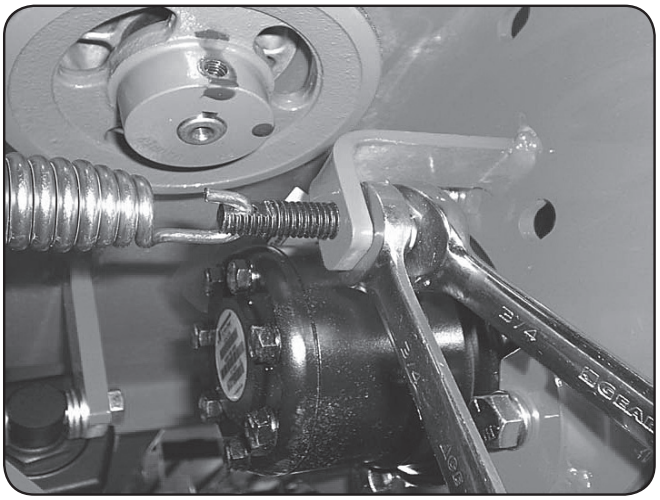

Factory setting is about .030˝ (about the thickness of a credit card) between coils as shown.

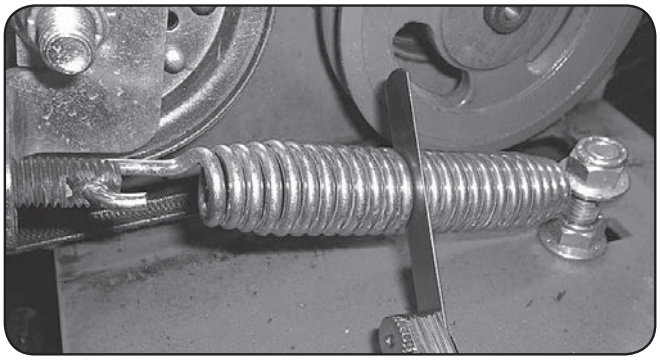

Shown to the right is a typical pump belt layout for most models.

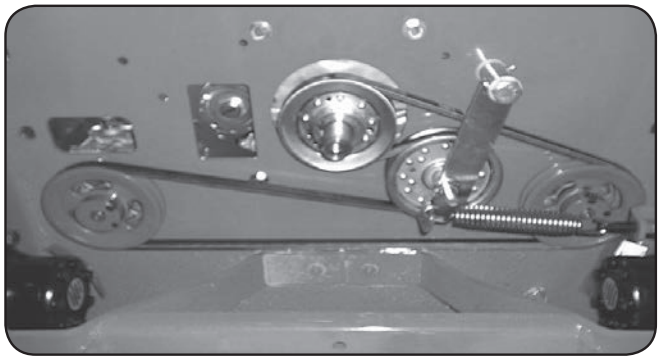

SECTION 3: ENGINE

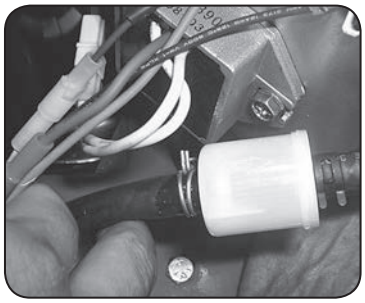

Most models have a drain hose installed on the engine, for easier oil changes. All gas engines used by Bad Boy use 10w30. Bad Boy recommends that the oil and filter be changed every 50 hours of usage.

The fuel filter is located in the fuel line about 12” from the carburetor on the side of the engine. Note the direction of flow on the side of the filter. Replace once a year.

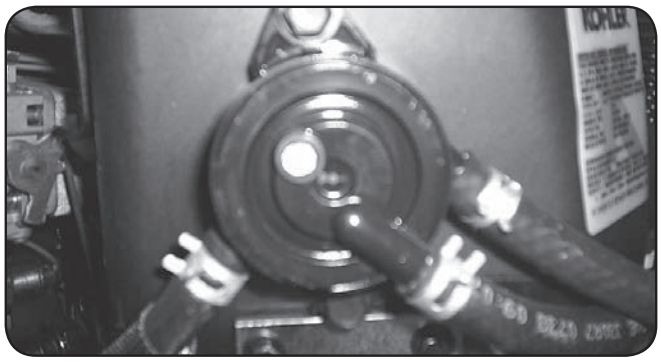

Most all models have a vacuum operated fuel pump bolted to the side or top of the engine. The pump has a “fuel in,” a “fuel out,” and a vacuum line coming from the engine block. Fuel flow can be checked here if the pump is suspected to be defective.

Remove and inspect air cleaner weekly. (More often in dusty conditions). Do not blow filter out with air pressure, this will cause the filter to be filled with tiny holes that will allow dirt to enter. Instead, tap filter on side to remove any debris. Replace at least once a year, more often in dusty conditions.

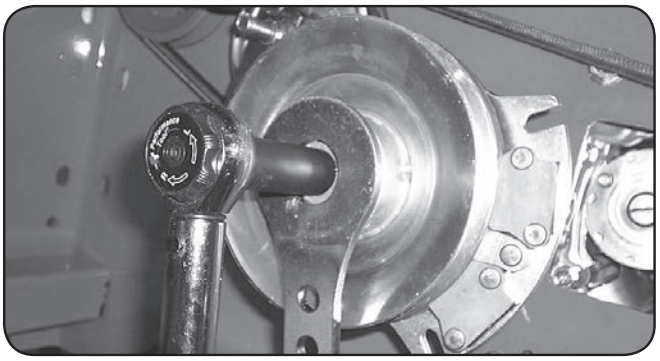

Torque the clutch bolt to 50 ft. lbs. on all models. Retorque at every oil change. (All Models)

SECTION 4: ELECTRICAL SYSTEM

On most larger commercial engines (27 hp and up), the 25 amp main fuse is located about 3˝ from the starter on the engine. (shown in first image on right). On smaller commercial and light duty commercial mowers, the 25 amp main fuse is located just behind the battery connected to the starter solenoid. (Shown in second image on right).

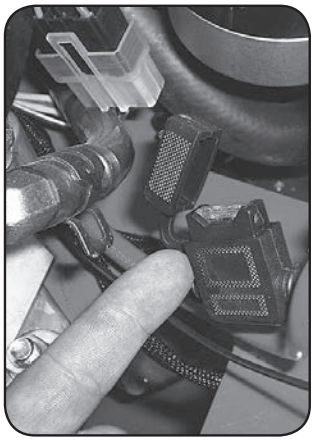

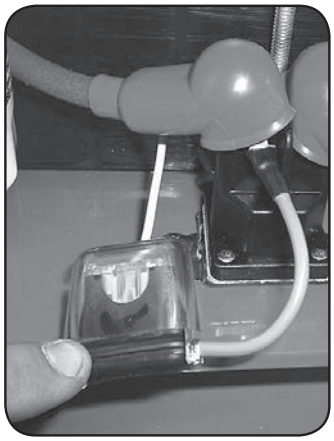

Always check the condition of the wiring harness ground cable. Ensure that the ground is connected, clean, and tight. On most models, the ground wire is connected to the negative side of the battery.

Check the condition and connection of the relays located under the seat. Ensure that they are clean and connected. Make sure that wire terminal ends have not been pushed out of the relay block.

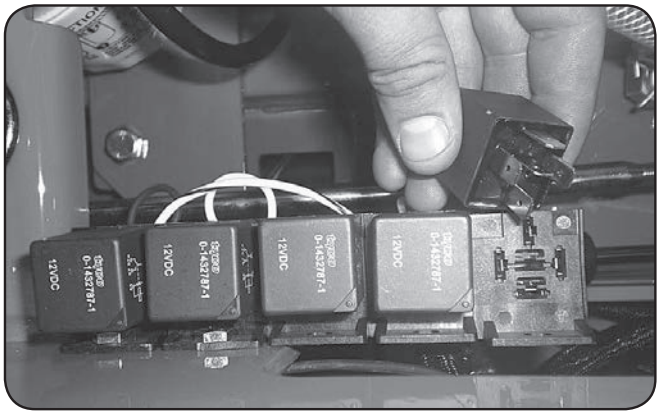

On most models, the red wire coming out of the engine is the charging wire from the alternator. Check for 13.6—14.2 volts DC at this wire with engine at full throttle.

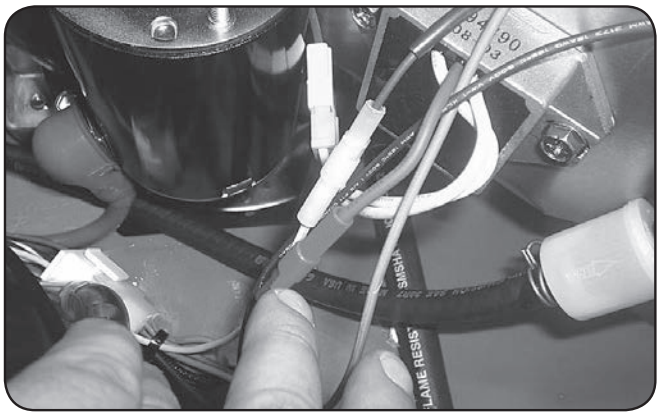

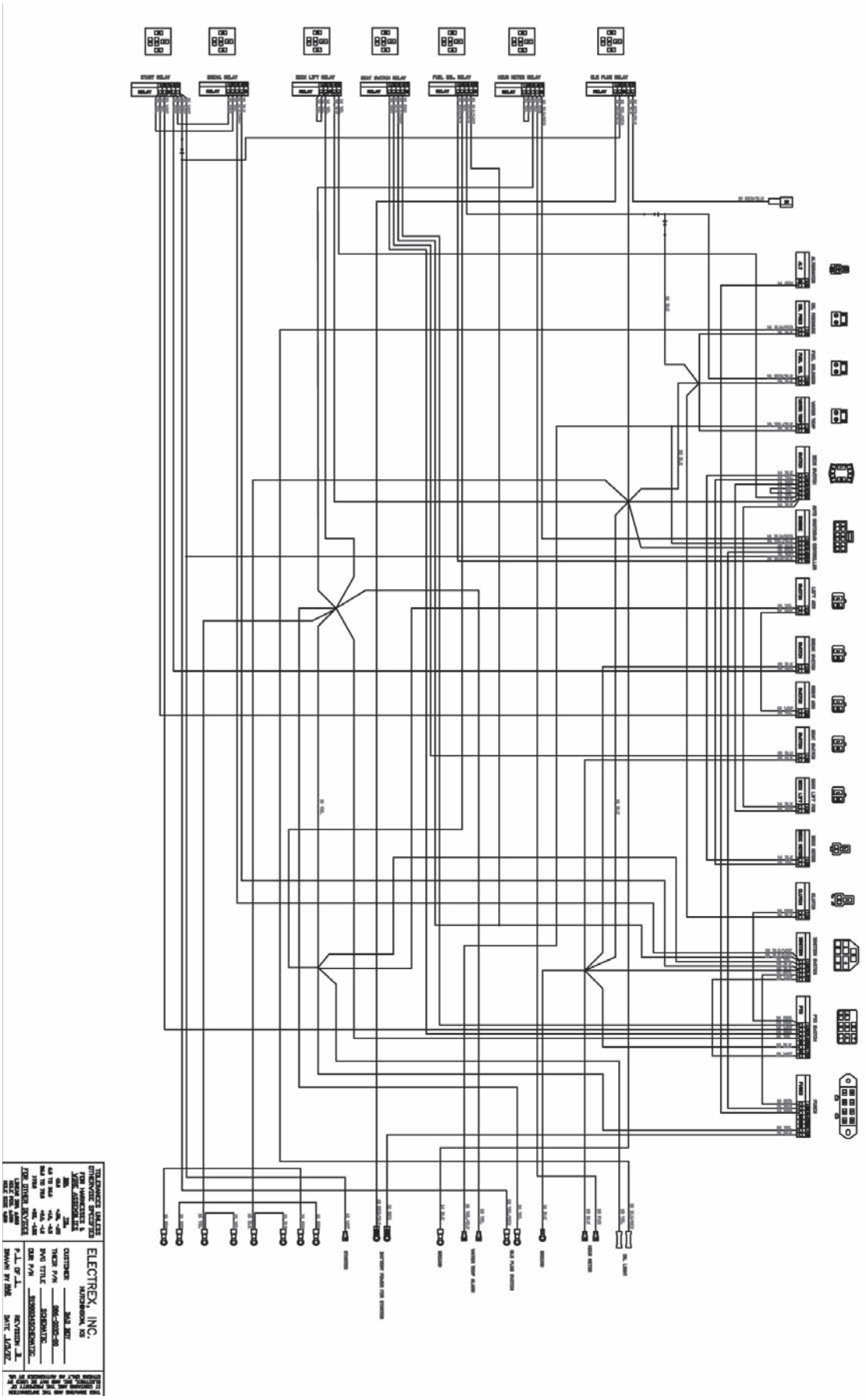
ELECTREX, INC.
HUTCHINSON, KS

SECTION 5: FRAME

For non-suspension models, torque front fork castle nut to 40 ft.lbs. Be sure to spin the fork while torquing the nut to ensure that no bearing damage is done. The torque for suspension forks should be 50 ft. lbs.

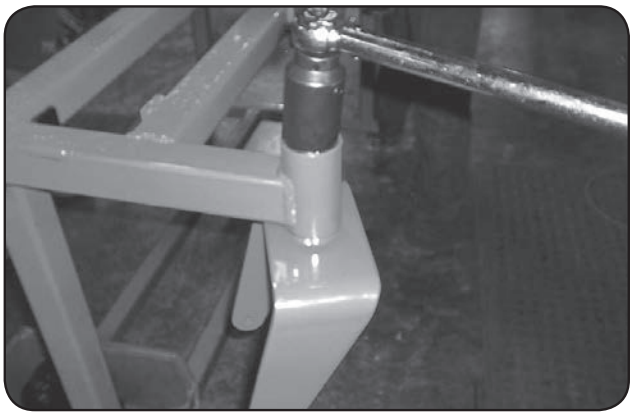

Torque rear wheel lugs to 65-75 ft. lbs.
Re-torque at every oil change.

There is one grease fitting in each front wheel and one in each front caster bearing housing. Grease at every engine oil change.

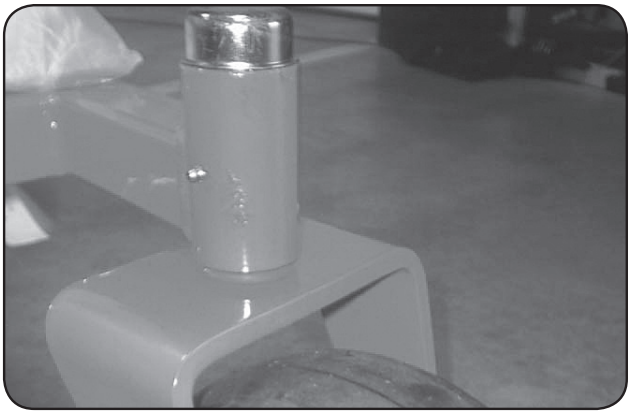

There is one grease fitting on each of the actuator bar pillow blocks located under the fuel tanks. Grease twice a season.

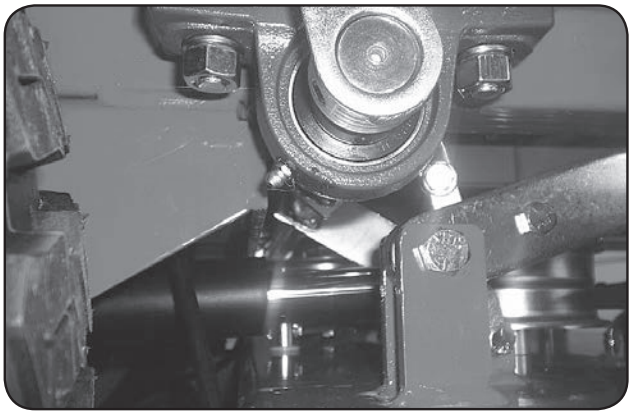

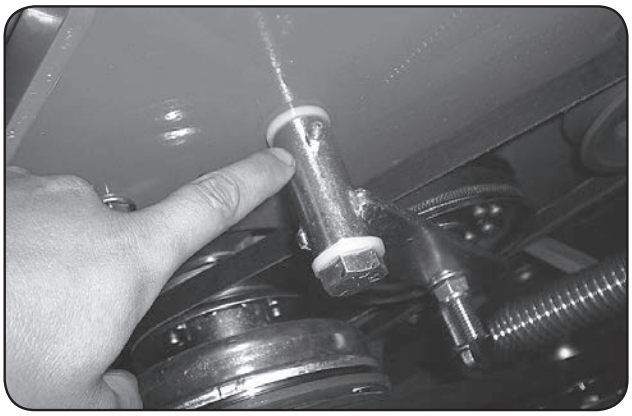

The pump belt tensioner is located under the engine and has a grease fitting at its pivot point. Grease at every engine oil change.

The deck belt tensioner is located at the rear of the deck and has a grease fitting on its pivot point. Grease at every engine oil change.

The control arm blocks have grease fittings located on the top of each block. Grease one time a year.

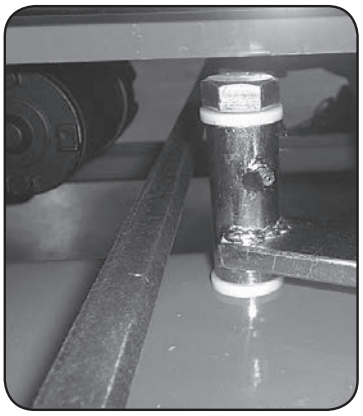

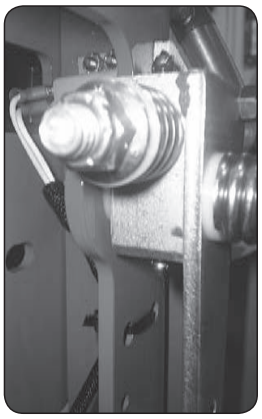

SECTION 6: CUTTING DECK

To remove the deck belt, lift up on the belt while rotating the pulley to roll the belt up and off of the pulley. (be sure not to get your fingers between belt and pulley).

To check the level of the deck, start on a flat surface and set the air pressure in all four tires. Raise the deck up, and measure all four corners of the deck to see if it is level from left to right and front to back. All decks should be level from left to right and have a 1/8˝ pitch down in the front.

If deck adjustments are necessary, start with the chain length adjusters. These adjusters affect the overall height of the deck and the level from left to right.

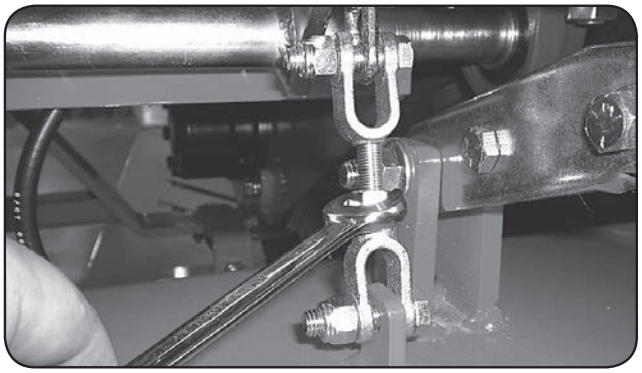

The large turn buckles on the front of the deck only affect the pitch of the deck or the level from front to back.

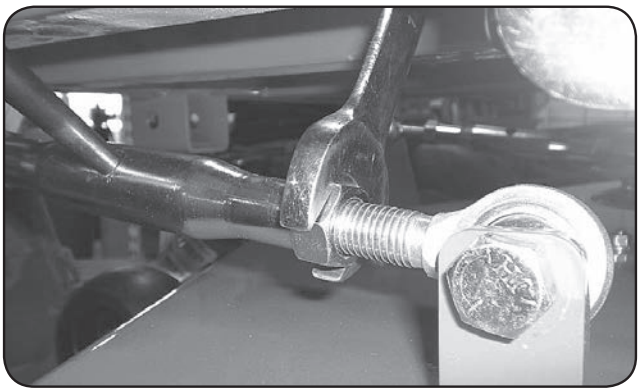

The deck spring tension is critical. If the tension is too much, it will cause the spring to break. If too loose, the belt can jump off or slip on the pulleys and cause a cut quality issue. With the deck up, the spring coil gap should be about .025˝ - .030˝ (about the thickness of a credit card). Spring tension adjustments can be made by sliding the bolt shown above forward or backward in the slot of the deck.

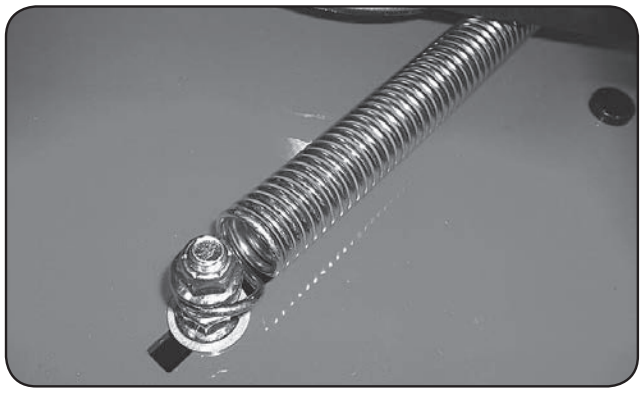

The condition of the blades can drastically affect the cut quality of the mower deck. Replace as necessary. These blades were used considerably too long. Resharpening is recommended by professionals only to determine when the blade needs to be replaced and because of the need for rebalancing.

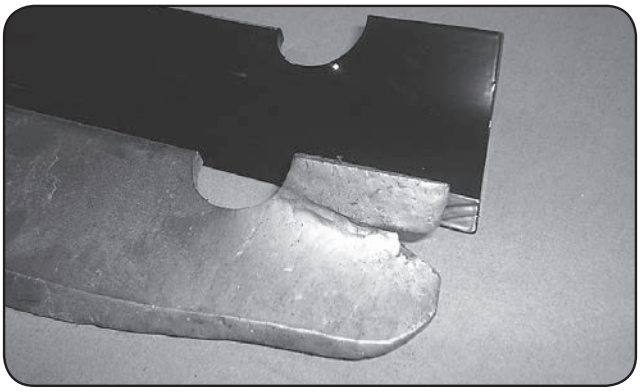

To change blades, it may be easier to use a piece of wood to keep the blade from turning so that the bolt can be loosened. **Bolts used have standard threads.** Re-torque the blade bolts to 90-110 lbs. The blade spindles contain a sealed ball bearing in the top and bottom of the spindle. The bearings are replaceable for a more cost effective repair.

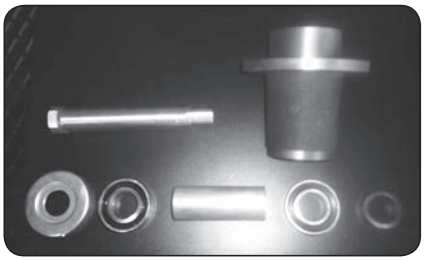

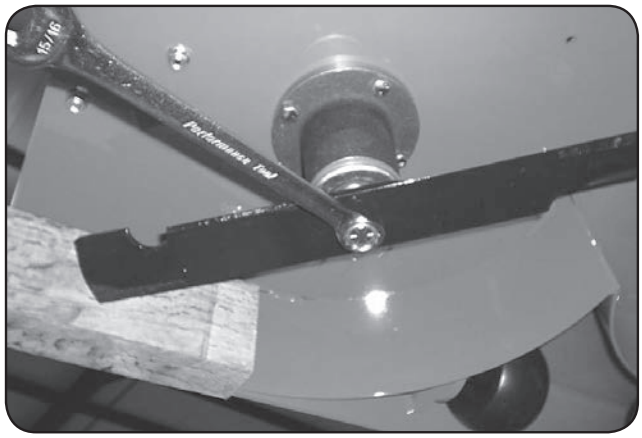

Outlaw XP
Suspension Fork Assembly

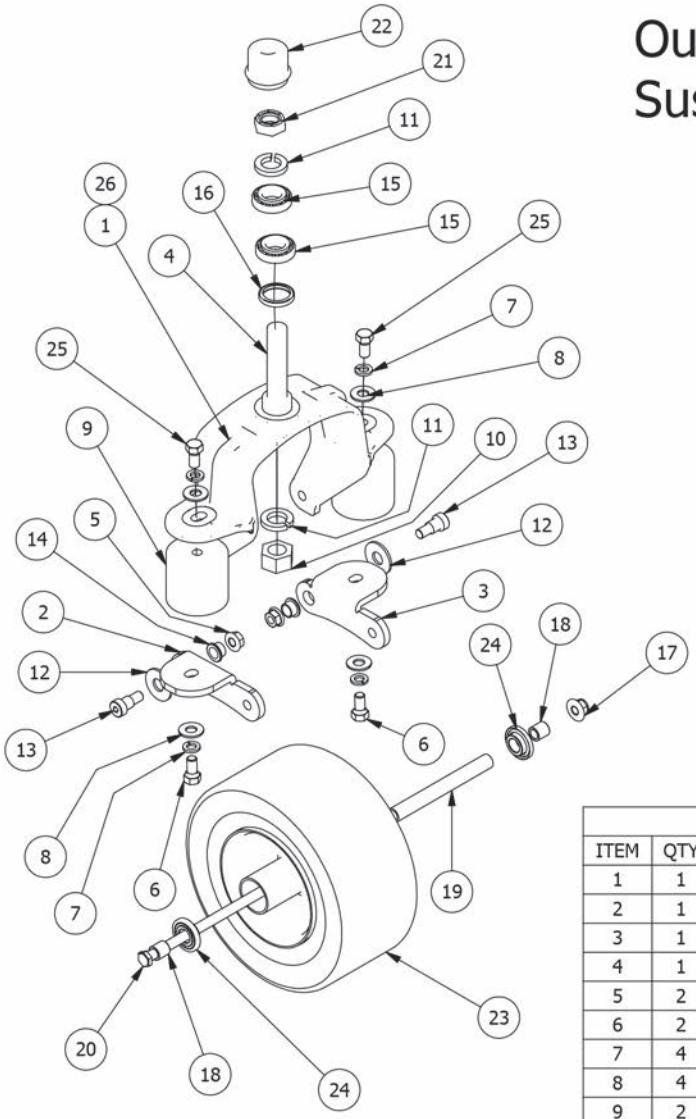

Suspension Fork Assembly			
ITEM	QTY	PART NUMBER	DESCRIPTION
1	1	023-0020-00	Suspension Fork Top/Side Combo
2	1	023-0012-00	Suspension Fork - Bottom Left
3	1	023-0013-00	Suspension Fork - Bottom Right
4	1	037-0010-00	Front Suspension Fork Spindle
5	2	013-5300-00	1/2" Flange Nut
6	2	018-2030-00	1/2" x 1" Hex Bolt
7	4	019-5007-00	1/2" Lock Washer
8	4	019-5702-00	1/2" Washer (Grade 8)
9	2	032-9002-00	Vibration Mount- Red Dot
10	1	013-6016-00	1" Fine Thread Nut
11	2	019-3000-00	1" Lock Washer
12	2	019-5038-00	5/8" Flat Washer
13	2	018-3001-00	5/8" x 5/8" Shoulder Bolt
14	2	032-5052-00	Bronze Bushing - SF - 2024-8
15	2	010-7001-00	Bearing
16	1	012-7003-00	Seal
17	1	013-8050-00	1/2-13 Nylon Flange Nut-Orange
18	2	025-5203-00	3/4 OD x 1/2 ID x 3\4 Length
19	1	025-5202-00	Front Wheel Spanner
20	1	018-3002-00	1/2" x 10" Bolt
21	1	013-9004-00	1" Fine Thread 1/2 Nut
22	1	014-7005-00	Dust Cover
23	1	022-3060-00	Tire and wheel assembly
24	2	022-7010-00	1-3/4" Bearing-Large Bore Front Rim
25	2	018-2080-00	1/2-13 x 1-1/4 Hex Bolt
26	1	023-7915-98	Suspension Fork Assembly

Outlaw XP Drive Arms

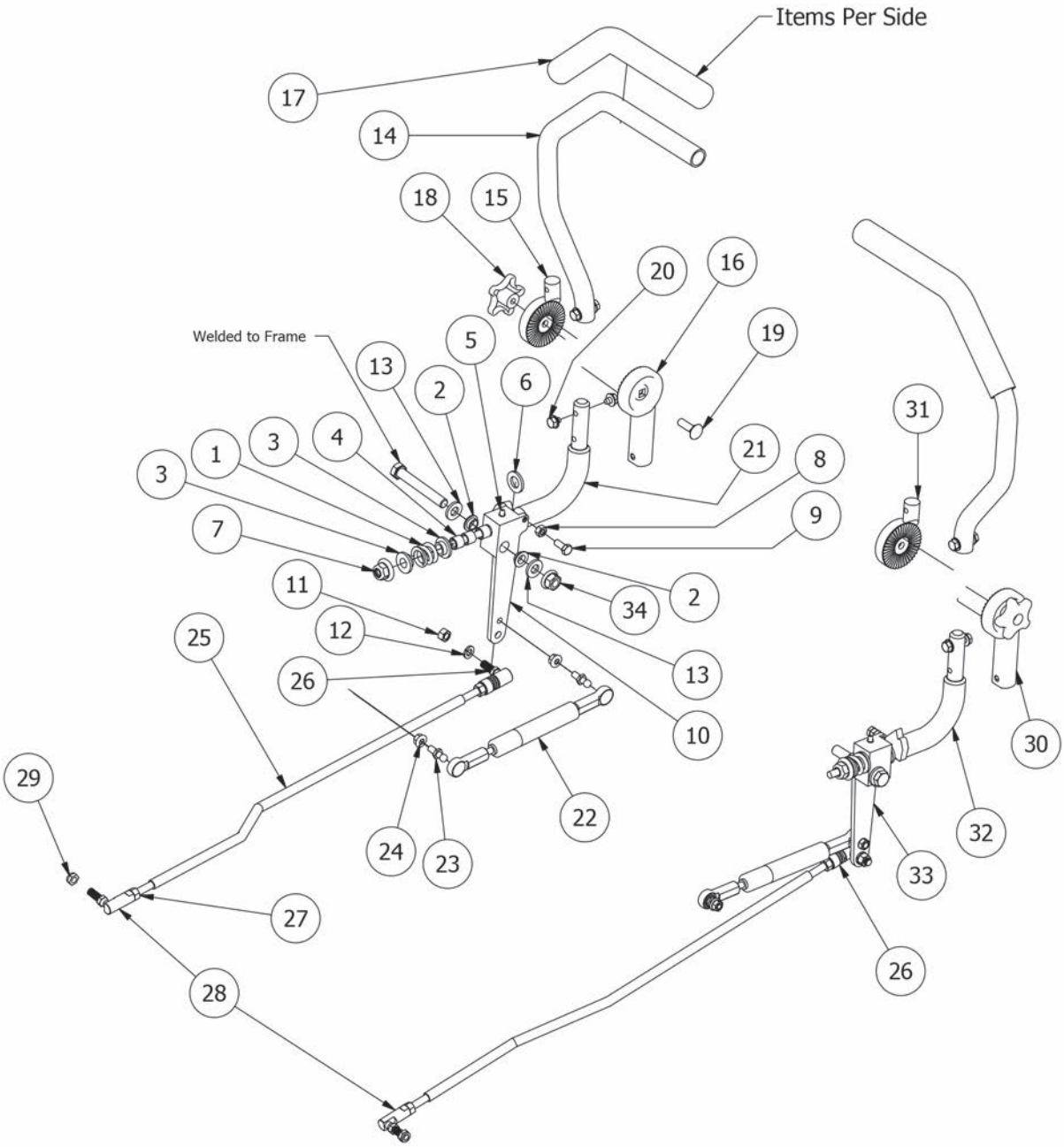

Outlaw XP Drive arms			
ITEM	QTY	PART NUMBER	DESCRIPTION
1	1	034-8025-00	Drive Lever Spring
2	2	032-5055-00	Bushing for 2012 Drive Arms
3	2	019-8027-00	.515 ID Nylon Shoulder Washer
4	3	032-8024-00	.507 ID Nylon Bushing
5	2	024-6034-00	1/4" Drive in Grease Fitting
6	1	019-6017-00	.635 ID Plastic Washer
7	1	013-8050-00	1/2-13 Nylon Flange Nut-Orange
8	1	013-8043-00	5/16" Nut
9	1	018-8063-00	5/16" x 3/4" Hex Bolt
10	1	027-8819-00	Drive Arm Lever Housing (Left)
11	1	013-6051-00	3/8" Fine Threaded Jam Nut
12	1	019-5037-00	3/8" Lock Washer
13	2	019-7000-00	.505x1x .125 Oil Impregnated washer
14	1	031-9010-00	Upper Tube-Adjustable Steering
15	1	031-9017-00	Upper adjuster-Steering Arm- Left
16	1	031-9014-00	Lower Adjuster - Steering Arm- Left
17	1	069-4010-00	Black Steering Grip
18	1	045-5000-00	Black Knob for Adjustable Steering Arm
19	1	018-5043-00	3/8" x 1 1/4" Carriage Bolt
20	4	018-2020-00	5/16-18 1/2 HWH Bolt-Steering
21	1	031-9020-00	Steering Arm Elbow - Left
22	1	087-3000-00	Steering Damper for Outlaw
23	2	018-2050-00	10mm Damper Ball Stud-Steering
24	2	013-9002-00	5/16" Flange Nut
25	1	035-5350-00	outlaw XP Push Rod
26	1	099-2009-00	Quick Release Ball Joint
27	2	013-6051-00	3/8" Fine Threaded Jam Nut
28	1	099-6046-00	3/8-24 Ball Joint
29	1	018-4011-00	3/8-24 Nylon Insert jam locknut
30	1	031-9015-00	Lower Adjuster - Steering Arm- Right
31	1	031-9016-00	Upper Adjust Steering Arm- Right
32	1	031-9025-00	Steering Arm Elbow - Right
33	1	027-8820-00	Drive Arm Lever Housing Right
34	1	013-0085-00	1/2-13 Hex Flange (GR.G) ZC

Outlaw XP Fuel Tanks & Control Panel Assemblies

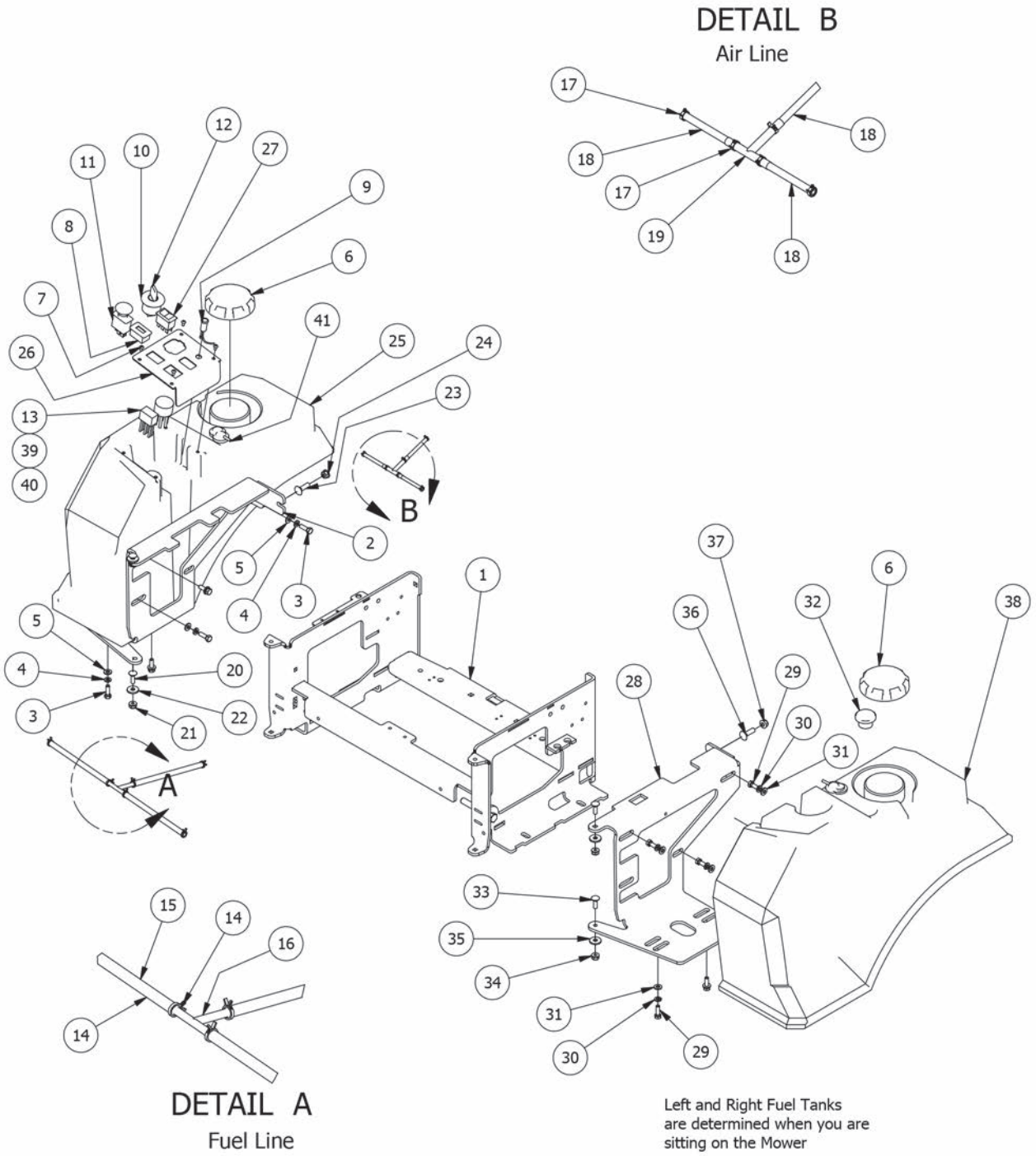

Outlaw XP Fuel Tanks & Control Panel Assemblies			
ITEM	QTY	PART NUMBER	DESCRIPTION
1	1	080-5000-00	Outlaw Seat Bracket 2012
2	1	031-2030-00	Outlaw Tank Support 2012 (Right)
3	5	018-2007-00	5/16" x 1" Bolt
4	5	019-8051-00	5/16" Lock Washer
5	5	019-8044-00	5/16" Flat Washer
6	2	066-8083-00	3.5" Tethered Fuel Cap
7	4	018-2010-00	10-32 x 3/8" Button Socket Head Bolt
8	1	083-4013-00	Tachometer
9	1	089-1000-00	Oil Light
10	1	077-8076-00	Ignition Switch
11	1	056-8058-00	PTO Engager
12	1	042-9000-00	Ignition Key
13	1	086-0045-00	Wiring Harness- 852cc kawasaki Outlaw
14	6	072-8069-00	1/4 fuel clamp
15	3	051-8067-00	1/4" fuel line hose
16	1	073-8068-00	fuel line T
17	6	072-8070-00	3/16 vinyl clamp
18	3	051-8072-00	1/4" vinyl tubing
19	1	073-8068-00	fuel line T
20	2	018-8065-00	5/16" x 1" Carriage Bolt
21	2	013-8049-00	5/16-18 Nylon Flange Nut
22	2	019-6042-00	.360 ID Plastic Washer
23	1	018-5043-00	3/8" x 1 1/4" Carriage Bolt
24	1	013-5202-00	3/8" Nylock Flange Nut
25	1	067-8001-50	2012 EPA Fuel Tank - XP-XTRM - Right
26	1	079-3350-00	Outlaw Control Panel (Rocker Switch)
27	1	078-3000-00	Rocker Deck Lift Switch - 2011
28	1	031-2031-00	Tank Support 2012 Outlaw (Left)
29	5	018-2007-00	5/16" x 1" Bolt
30	5	019-8051-00	5/16" Lock Washer
31	5	019-8044-00	5/16" Flat Washer
32	1	067-4050-00	Fuel Gauge-Tanks w/downtube
33	2	018-8065-00	5/16" x 1" Carriage Bolt
34	2	013-8049-00	5/16-18 Nylon Flange Nut
35	2	019-6042-00	.360 ID Plastic Washer
36	1	018-5043-00	3/8" x 1 1/4" Carriage Bolt
37	1	013-5202-00	3/8" Nylock Flange Nut
38	1	067-8000-50	2012 EPA Fuel Tank- XP-XTRM- Left
39	1	086-0032-00	Wiring Harness 993cc Vanguard Outlaw
40	1	086-1201-00	Relay Terminal
41	1	067-6052-00	Rollover Valve-White

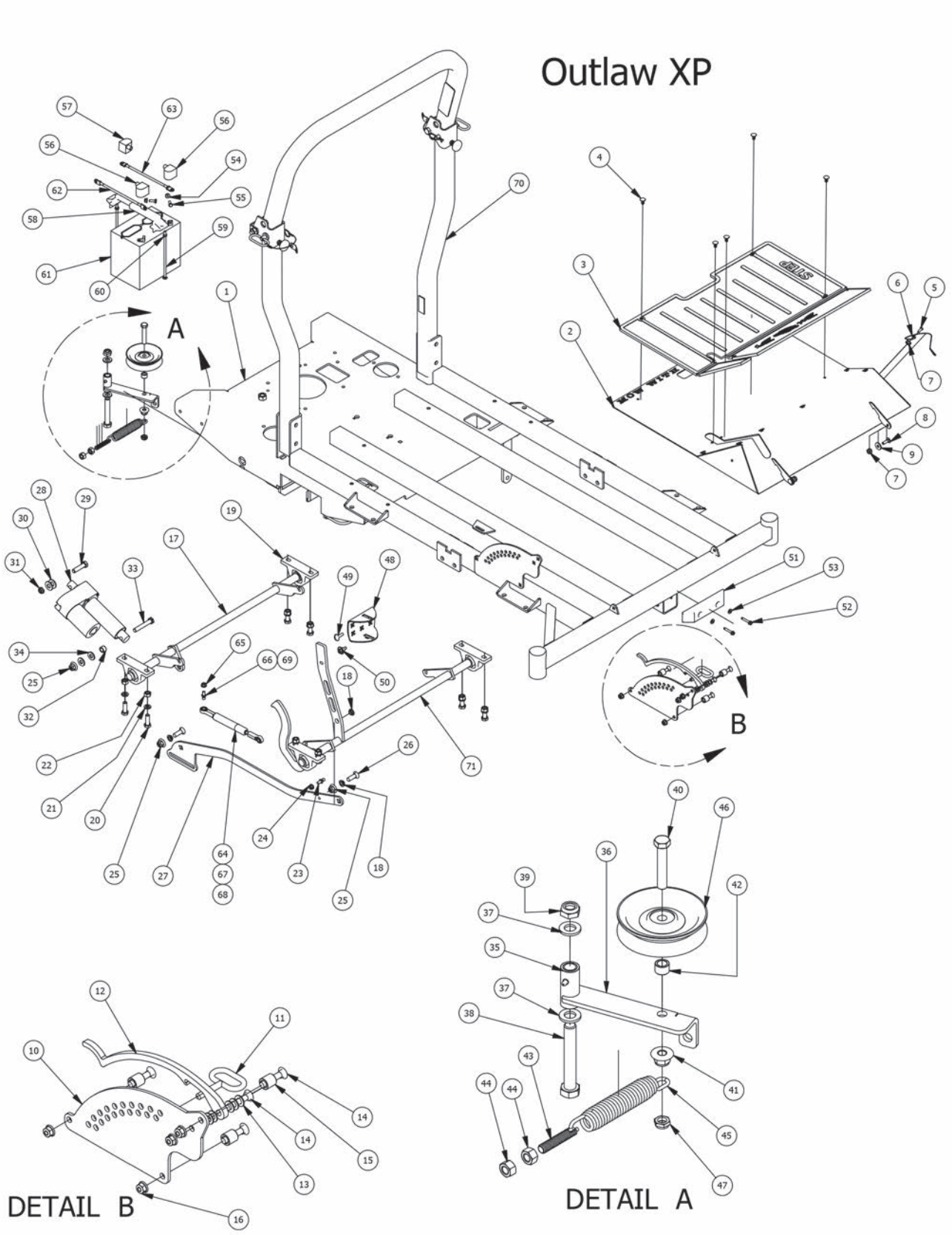
Outlaw XP
A
B
DETAIL B
DETAIL A

Outlaw XP Frame, Actuator, Floor Board, Height Indicator, and Pump Idler Assemblies			
ITEM	QTY	PART NUMBER	DESCRIPTION
1	1	070-5360-00	Outlaw XP Frame
2	1	079-3100-00	Outlaw Floor Panel
3	1	081-2008-00	Foot Assist Floor Mat
4	11	040-6080-00	Ratchet Fastener
5	1	018-8064-00	1/4" x 5/8" BS C/S 18-8 SS
6	1	064-2006-00	Floor board Cable W/ Swivel Ends
7	3	013-8049-00	5/16-18 Nylon Flange Nut
8	2	018-8065-00	5/16" x 1" Carriage Bolt
9	2	019-6042-00	.360 ID Plastic Washer
10	1	026-2100-00	Outlaw Height Indicator Plate (Outer)
11	1	040-4000-00	Deck height lever pin
12	1	031-0100-00	Outlaw Deck Lever Lock
13	5	019-2003-00	.390 x .750 x .062 Nylon Washer
14	4	018-0009-00	3/8 x 1 3/4 Carriage Bolt
15	3	025-5203-00	3/4 OD x 1/2 ID x 3\4 Length
16	4	013-5202-00	3/8" Nylock Flange Nut
17	1	028-6020-00	Outlaw Actuator Bar (Rear)
18	2	032-3000-00	Bushing- SF-1620-4
19	4	017-7008-00	pillow block 2bolt sealmaster
20	8	018-5006-00	1/2" x 1 1/2" Hex Bolt
21	8	019-5007-00	1/2" Lock Washer
22	8	013-7018-00	1/2" Hex Nut
23	2	018-2050-00	10mm Damper Ball Stud-Steering
24	1	013-9002-00	5/16" Flange Nut
25	3	013-8050-00	1/2-13 Nylon Flange Nut-Orange
26	2	018-0008-00	1/2 x 1-1/2 Carriage Bolt
27	1	028-6055-00	Outlaw Susp Frame Linkage Bar
28	1	035-7033-00	Actuator
29	1	018-5049-00	1/2-13x2 GR 5 Hex Bolt
30	2	019-5702-00	1/2" Washer (Grade 8)
31	1	018-4010-00	1/2" Nylcock Nut (1/2 Jam)
32	1	025-7036-00	1/2 x 1/2 Spacer
33	1	018-7016-00	1/2-13 x GR 5 Hex Bolt Zinc
34	2	019-8054-00	.505 Nylon Spacer
35	1	039-5944-98	Pump Idler assembly Componets 36,40,41,42,46
36	1	039-5944-00	Pump Idler Bracket
37	2	019-6017-00	.635 ID Plastic Washer
38	1	018-5311-00	5/8" x 4" Hex Bolt
39	1	013-5301-00	5/8" Nylock (1/2 Jam)
40	1	018-6036-00	1/2" x 2 3/4" Hex Bolt
41	1	013-8050-00	1/2-13 Nylon Flange Nut-Orange
42	1	025-7036-00	1/2 x 1/2 Spacer
43	1	018-2004-00	All Thread-pump Idler Tensioner
44	2	013-7018-00	1/2" Hex Nut
45	1	034-2009-00	Pump Idler Spring
46	1	033-6001-00	4 3/4" Idler Pulley
47	1	018-4010-00	1/2" Nylcock Nut (1/2 Jam)
48	1	026-0013-00	Outlaw Deck Lift Pedal
49	1	030-0010-00	5/16-18 x1 Thumb Screw Zinc
50	1	040-5000-00	Pull Pin
51	1	029-7038-00	8" Rubber Bumper
52	2	030-7039-00	1/4" x 1 1/2" Self Tapping Screw
53	2	019-7040-00	1/4" Flat Washer
54	2	013-9001-00	1/4-20 Hex Flange Nuts Zinc w/Serrations
55	2	018-8052-00	1/4-20 x 3/4 GR 5 Hex Bolts Zinc
56	2	103-5400-00	Black Boot For ground cable
57	1	103-5300-00	Red Boot
58	1	043-8929-00	Battery Hold Down
59	2	018-8050-00	1/4-20 X 8 Carriage Bolt
60	2	013-8039-00	1/4-20 Hex Nut
61	1	068-8049-00	Battery
62	1	086-0005-00	Starter to chassis cable
63	1	064-5300-00	Red battery cable
64	1	087-5400-00	200 lb Gas Spring- 54" Deck outlaw
65	1	013-9002-00	5/16" Flange Nut
66	1	018-2050-00	10mm Damper Ball Stud-Steering
67	1	087-7200-00	300 lb Gas Spring 72" Deck Outlaw
68	1	087-6100-00	250 lb Gas Spring 61" Deck outlaw
69	2	018-2049-00	13mm Ball Stud for 72" Deck Only
70	1	089-3000-00	Outlaw-2010 and Up
71	1	028-6010-00	Outlaw Front Actuator Bar Assy

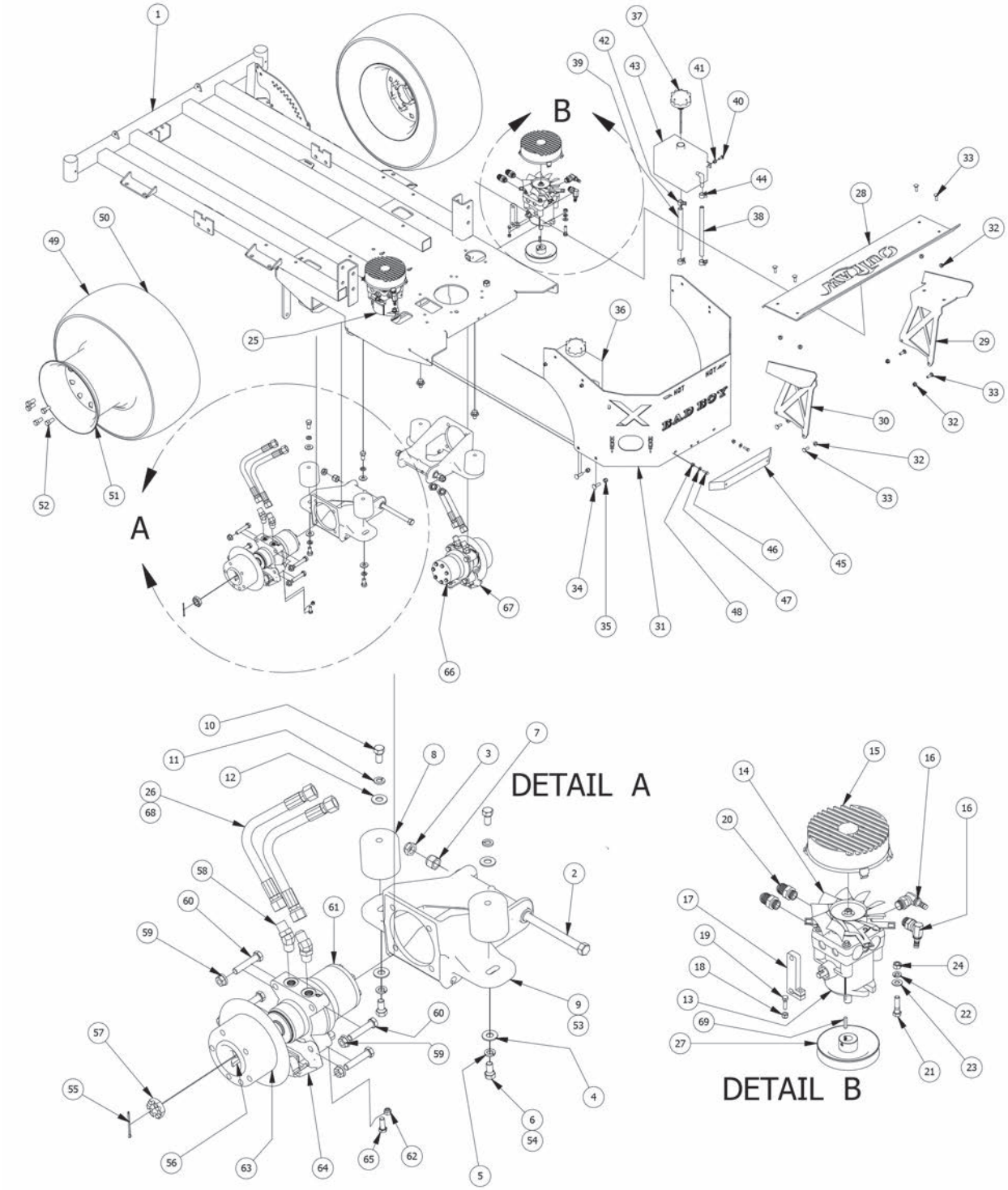
A
B
DETAIL A
DETAIL B

Outlaw XP Frame Assembly			
ITEM	QTY	PART NUMBER	DESCRIPTION
1	1	070-5360-00	2012 Suspension Outlaw
2	2	018-2051-00	5/8"x10" Hex Bolt (Grade8)
3	2	013-5301-00	5/8" Nylock (1/2 Jam)
4	4	019-5702-00	1/2" Washer (Grade 8)
5	4	019-5007-00	1/2" Lock Washer
6	4	018-2030-00	1/2" x 1" Hex Bolt
7	2	013-7021-00	5/8 Std NC Nylock Nut
8	4	032-9000-00	Vibration Mount-Green Dot
9	2	070-8000-00	60" Suspension Kit Wheel Motor
10	4	018-2030-00	1/2" x 1" Hex Bolt
11	4	019-5007-00	1/2" Lock Washer
12	4	019-5702-00	1/2" Washer (Grade 8)
13	1	050-3000-00	Left Pump 12cc
14	1	015-9999-00	Hydraulic Fan
15	1	014-5600-00	Fan Guard 6" Fits wheel Motor Pumps
16	2	024-5206-00	3/8" X 9/16"-18 ORB Male Fitting (S,A-2 P-4)
17	1	031-5333-00	Pump Arm
18	1	013-8073-00	1/4" Nylock Nut
19	1	018-4007-00	1/4-20 x 1 GR 5 hex bolt zinc
20	2	024-5343-00	Hydraulic Pump Fitting 6400-10
21	2	018-6012-00	3/8" x 1 1/2" Hex Bolt
22	2	019-5037-00	3/8" Lock Washer
23	2	019-5029-00	3/8" Flat Washer
24	2	013-6014-00	3/8" Hex Nut
25	1	050-3050-00	Right Pump 12cc
26	4	051-2000-00	18" hose Assembly W/forged 45 Degrees
27	2	033-5003-00	5" Pump Pulley
28	1	026-1040-00	Outlaw Spoiler Plate
29	1	201-1040-00	Outlaw Susp Spoiler Bracket (Right)
30	1	201-1041-00	Outlaw Susp Spoiler Bracket (Left)
31	1	026-2200-00	Outlaw Rear Cover Plate Susp Frame
32	8	013-9002-00	5/16" Flange Nut Zinc W/Serrations
33	8	018-8065-00	5/16" x 1" Carriage Bolt
34	4	018-5043-00	3/8" x 1 1/4" Carriage Bolt
35	4	013-5041-00	3/8 Nylock Nut
36	1	067-8051-00	Outlaw Hydraulic Tank Left
37	1	066-8050-00	Hydraulic Tank Cap W/Dipstick
38	1	051-8063-00	3/8 clear hose price per foot
39	1	051-8064-00	1/2 Clear Braded Hose Priced/Foot
40	2	018-8040-00	1/4" x 3/4" Carriage Bolt
41	2	013-2050-00	1/4-20 Nylon Insert flange Nut
42	2	072-8066-00	1/2 Hose Clamp
43	1	067-8050-00	Outlaw Hydraulic Tank Right
44	2	072-8065-00	3/8 hose clamp
45	1	029-7037-00	14" Rubber Bumper
46	2	018-4702-00	1/4-20 x 1-1/4 GR 5 Hex Bolt
47	2	019-7040-00	1/4" Flat Washer
48	2	013-2050-00	1/4-20 Nylon Insert flange Nut
49	2	022-4000-00	24 x 12.00-10 Tire and Wheel assembly
50	1	022-4005-00	24 x 12.00 - 10 outlaw Tire
51	1	022-4010-00	10" Wheel For Outlaw
52	10	018-7033-00	1/2-20 x 1-1/2 Lug Bolts Zinc
53	1	070-8001-00	72" Suspension Kit Wheel Motor
54	2	018-2080-00	1/2-13 x 1/1/4 Hex Bolt Only on 60" Suspension kit wheel Motor
55	1	020-7022-00	1/8x2-1/4 cotter pin Zinc
56	1	042-7041-00	Woodruff Key
57	1	013-7050-00	1" Castle Nut for Wheel Motor
58	2	024-0050-00	45 Degree Fitting 31704-10-10
59	4	013-5300-00	1/2" Flange Nut
60	4	018-6036-00	1/2" x 2 1/2" Hex Bolt
61	1	015-4501-00	15cc Parker Wheel Motor- Left
62	1	013-8047-00	5/16-18 Nylock Insert Locknut
63	1	092-5201-00	Brake Disk
64	1	092-7001-00	XP/AOS Left Brake Caliper
65	1	018-6049-00	3/8" x 1" Hex Bolt
66	1	015-4500-00	15cc Parker Wheel Motor- Right
67	1	092-7000-00	XP/AOS Right Brake Caliper
68	4	051-6005-00	18" Hydraulic Hose Only
69	2	042-0010-00	3/16 x 1 Square Key

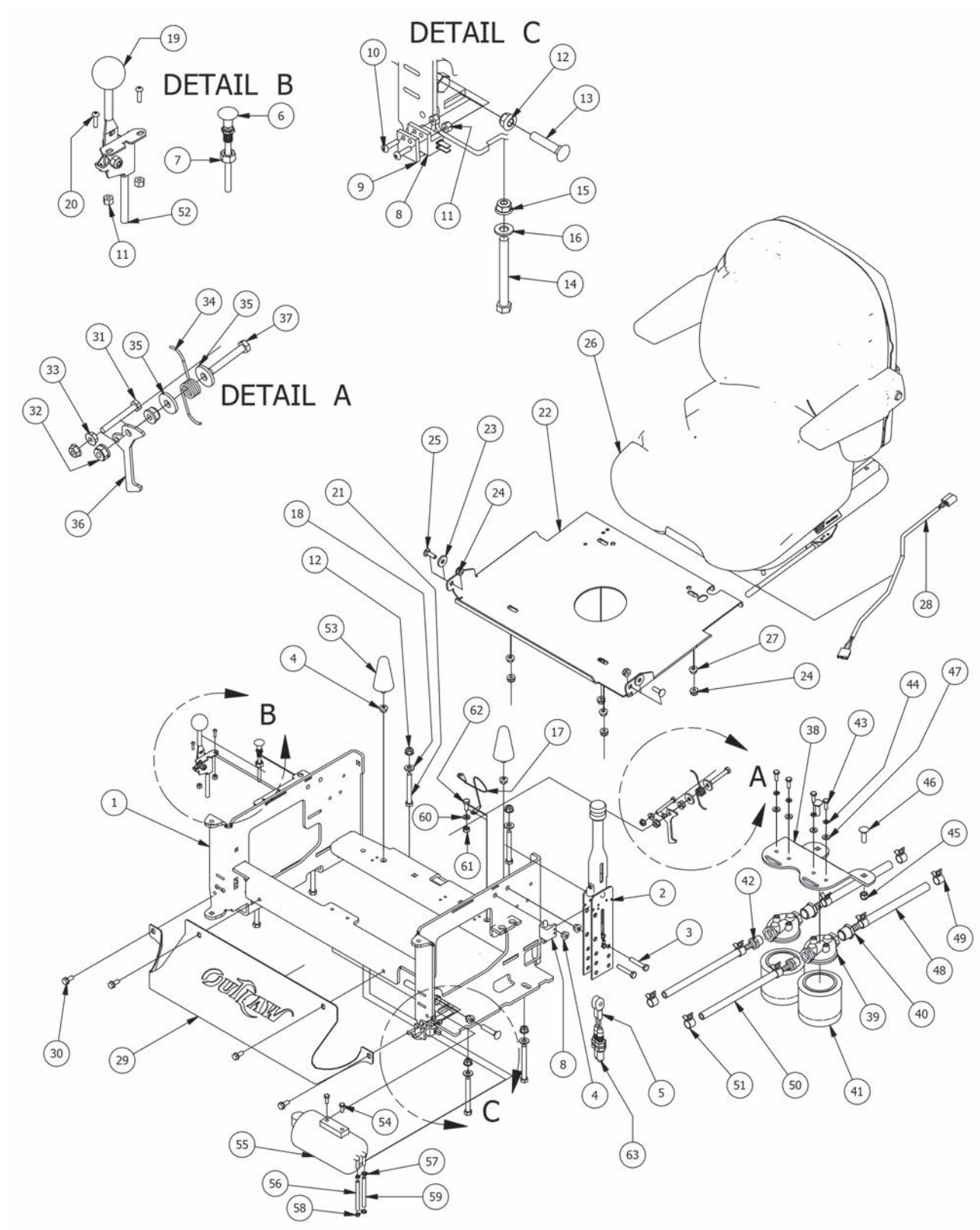
DETAIL B
DETAIL C
DETAIL A
A
B
C
OUTLAW

Seat Frame Assembly			
ITEM	QTY	PART NUMBER	DESCRIPTION
1	1	080-5000-00	Outlaw Seat Bracket 2012
2	1	069-8054-00	Hand Brake
3	2	018-8059-00	5/16" x 1 3/4" Hex Bolt
4	4	013-8049-00	5/16" Nylon Flange Nut
5	2	064-8056-00	Long Brake Cable
6	1	054-8017-00	Choke
7	1	013-6051-00	3/8" Fine Threaded Jam Nut
8	3	077-8073-00	Safety Switch
9	2	025-6041-00	Switch Block Plastic
10	4	018-8058-00	10-24 x 1 BS C/S 18-8 SS
11	6	013-5019-00	10-24 Nylon Insert Locknut
12	4	013-5202-00	3/8" Nylock Flange Nut
13	2	018-0009-00	3/8 x 1 3/4 Carriage Bolt
14	4	018-1010-00	3/8-16x3-1/2 grade 5 hex bolt
15	4	013-5202-00	3/8" Nylock Flange Nut
16	4	019-5029-00	3/8" Flat Washer
17	1	064-8081-00	Seat Cable
18	2	019-5029-00	3/8" Flat Washer
19	1	055-2012-00	Universal Throttle Head - 2012
20	2	018-5200-00	10-24 X 5/8 BS C/S 18-8 SS
21	2	018-4700-00	3/8-16x3 grade 5 hex bolt
22	1	026-2006-00	2006 Seat Plate
23	2	019-6042-00	.360 ID Plastic Washer
24	6	013-8049-00	5/16-18 Nylon Flange Nut
25	2	018-8065-00	5/16" x 1" Carriage Bolt
26	1	071-5000-00	2010 Outlaw Seat
27	4	013-9002-00	5/16" Flange Nut
28	1	036-5300-00	Seat Switch Adapter
29	1	014-2100-00	Outlaw Cooler Cover
30	4	030-7042-00	5/16 x 3/4 washer head type F screw
31	1	018-0011-00	1/4-20 x 2 Hex Bolt
32	2	013-8049-00	5/16-18 Nylon Flange Nut
33	2	013-9001-00	1/4-20 Hex Flange Nuts Zinc w/Serrations
34	1	034-1075-00	Torsion Spring for Seat latch
35	3	019-6042-00	.360 ID Plastic Washer
36	1	031-0200-00	Seat Latch Lever
37	1	018-0012-00	5/16-18 X 2 Hex C/S (GR.5) ZC
38	1	039-2130-00	Outlaw Filter Bracket
39	2	062-8013-00	Filter Head-Hydraulic Filter
40	2	024-5050-00	Filter Head Fitting 1/2 x 1/2
41	2	063-8014-00	Hydraulic filter
42	2	024-5342-00	1/2" Pipe to 3/8" Barb
43	4	018-8052-00	1/4" x 3/4" Hex Bolt
44	4	019-4008-00	1/4" Lock Washer
45	2	013-5041-00	3/8 Nylock Nut
46	2	018-5043-00	3/8" x 1 1/4" Carriage Bolt
47	4	019-7040-00	1/4" Flat Washer
48	2	051-8064-00	1/2 Clear Braded Hose Priced/Foot
49	4	072-8066-00	1/2 Hose Clamp
50	2	051-8063-00	3/8 clear hose price per foot
51	4	072-8065-00	3/8 hose clamp
52	1	055-8021-75	Outlaw Throttle Cable Only
53	2	034-1444-00	Rubber Cone-1621-153
54	2	018-0024-00	M6-1.0 X 16MM Hex Bolt
55	1	067-0020-00	Carbon Canister ZT,CZT,Outlaw
56	1	051-8073-00	3/16 vinyl tubing
57	2	072-8070-00	3/16 vinyl clamp
58	2	072-8073-00	3/16" Vinyl Hose Clamp
59	1	051-8072-00	1/4" vinyl tubing
60	1	019-8051-00	5/16" Lock Washer
61	1	013-8043-00	5/16" Nut
62	1	018-8063-00	5/16" x 3/4" Hex Bolt
63	1	064-8055-00	Short Brake Cable

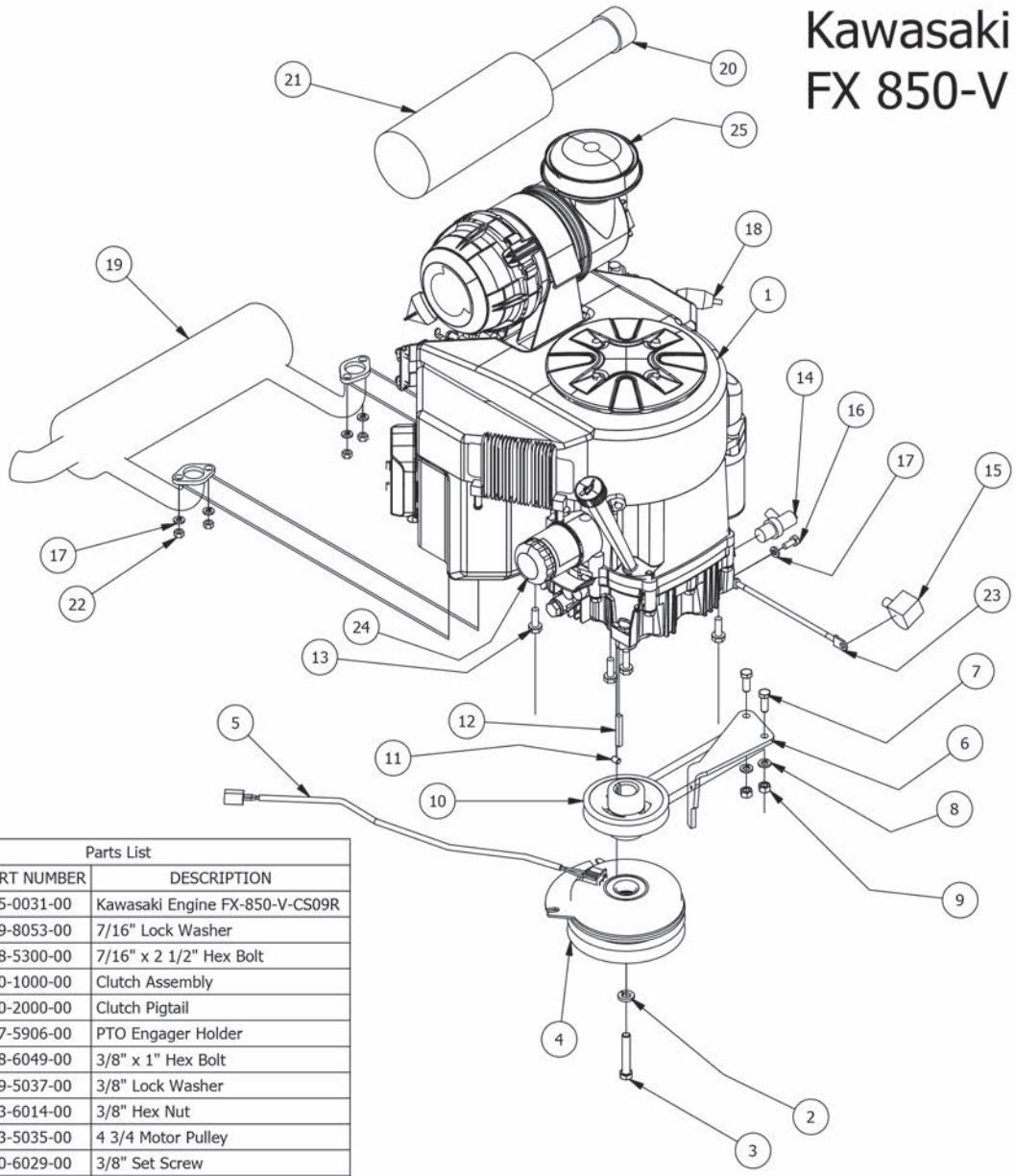

Parts List			
ITEM	QTY	PART NUMBER	DESCRIPTION
1	1	015-0031-00	Kawasaki Engine FX-850-V-CS09R
2	1	019-8053-00	7/16" Lock Washer
3	1	018-5300-00	7/16" x 2 1/2" Hex Bolt
4	1	070-1000-00	Clutch Assembly
5	1	070-2000-00	Clutch Pigtail
6	1	057-5906-00	PTO Engager Holder
7	2	018-6049-00	3/8" x 1" Hex Bolt
8	2	019-5037-00	3/8" Lock Washer
9	2	013-6014-00	3/8" Hex Nut
10	1	033-5035-00	4 3/4 Motor Pulley
11	1	030-6029-00	3/8" Set Screw
12	1	042-5020-00	1/4 x 2 Square key Stock
13	4	018-1075-00	3/8 x 1 1/8 bolt
14	1	015-5404-00	oil drain
15	1	103-5400-00	Black Boot For ground cable
16	1	018-5321-00	M8x1.20x20MM Hex head bolt
17	5	019-8051-00	5/16" Lock Washer
18	1	063-6000-00	Universal inline Fuel Filter
19	1	015-0035-00	Kawasaki Exhaust
20	1	063-8020-00	Canister Air Filter- Inner
21	1	063-8019-00	Canister Air Filter- Outer
22	4	013-0075-00	M8-1.25 Zinc Nut
23	1	086-0005-00	Starter to chassis cable
24	1	063-8017-00	Kawsaki Oil Filter
25	1	088-1071-00	Kawasaki Rain Cap

993cc Vanguard

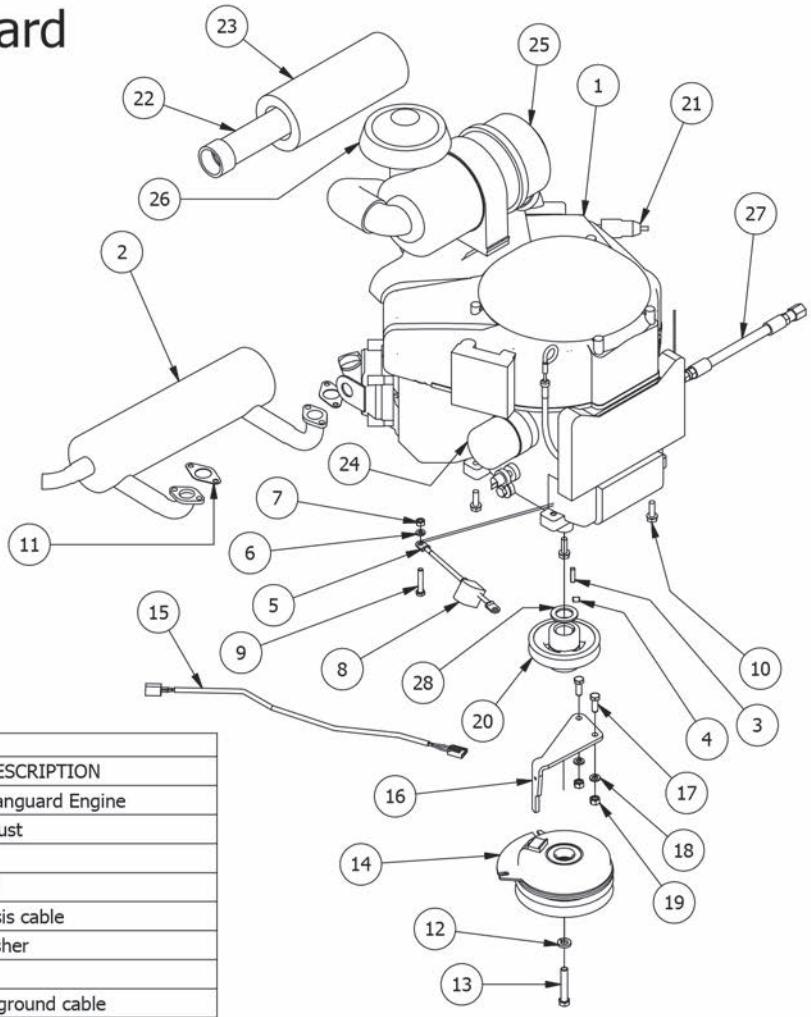

993cc Vanguard			
ITEM	QTY	PART NUMBER	DESCRIPTION
1	1	015-3600-00	993cc Briggs Vanguard Engine
2	1	015-0034-00	Vanguard Exhaust
3	1	042-6030-00	1/4" x 1" Key
4	1	030-0050-00	5/16 Set Screw
5	1	086-0005-00	Starter to chassis cable
6	1	019-8051-00	5/16" Lock Washer
7	1	013-8043-00	5/16" Nut
8	1	103-5400-00	Black Boot For ground cable
9	1	018-8059-00	5/16" x 1 3/4" Hex Bolt
10	3	018-1075-00	3/8 x 1 1/8 bolt
11	2	015-0025-00	Exhaust Gasket
12	1	019-8053-00	7/16" Lock Washer
13	1	018-5300-00	7/16" x 2 1/2" Hex Bolt
14	1	070-1000-00	Clutch Assembly
15	1	070-2000-00	Clutch Pigtail
16	1	057-5906-00	PTO Engager Holder
17	2	018-6049-00	3/8" x 1" Hex Bolt
18	2	019-5037-00	3/8" Lock Washer
19	2	013-6014-00	3/8" Hex Nut
20	1	033-5035-00	4 3/4 Motor Pulley
21	1	063-6000-00	Universal inline Fuel Filter
22	1	063-8020-00	Canister Air Filter- Inner
23	1	063-8019-00	Canister Air Filter- Outer
24	1	063-8018-00	Briggs Oil Filter
25	1	015-2705-00	Complete Canister
26	1	063-2045-00	Rain Cap Fits all Canisters
27	1	051-5402-00	14 mm Oil drain Hose 993cc Vanguard
28	1	019-6029-00	1 1/8" Flat Spacer

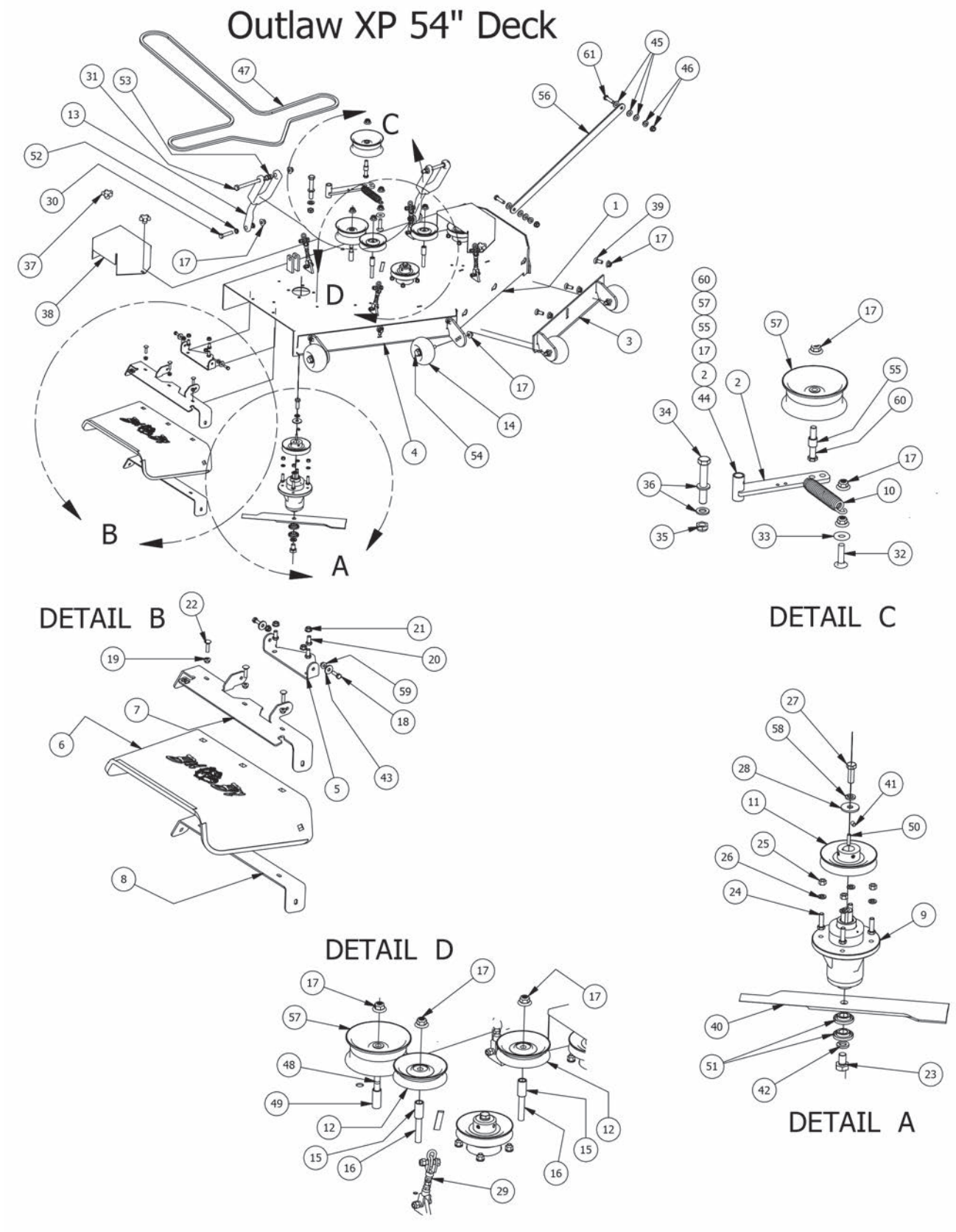
Outlaw XP 54" Deck
DETAIL B
DETAIL C
DETAIL D
DETAIL A

Outlaw XP 54" Deck			
ITEM	QTY	PART NUMBER	DESCRIPTION
1	1	060-5500-00	54" Outlaw (Deck Only)
2	1	039-6945-00	Deck Idler Bracket
3	1	060-5520-00	54 Outlaw Adjustable Deck Front (Right)
4	1	060-5530-00	54 Outlaw Adjustable Deck Front (left)
5	1	206-6017-00	Discharge Chute Hanger (deck mounted)
6	1	210-6005-00	Rubber Discharge Chute
7	1	039-4864-00	Dischurge Chute Upper Hanger
8	1	039-4863-00	60" Discharge Lower Bracket
9	3	037-8000-50	Double Bearing Spindle Assembly
10	1	034-2009-00	2009 Deck/Pump Idler Spring
11	3	033-6003-00	5" Deck Pulley
12	2	033-6001-00	4 3/4" Idler Pulley
13	2	031-6010-00	Deck Hanger
14	6	022-1000-00	Deck Wheel
15	2	025-5338-00	Pulley Spacer
16	2	018-2018-00	1/2 x 3 1/2 Flange Bolt Grade 8
17	22	013-8050-00	1/2-13 Nylon Flange Nut-Orange
18	2	018-2007-00	5/16" x 1" Bolt
19	3	013-9002-00	5/16" Flange Nut
20	3	018-5250-00	3/8" x 3/4" Hex Bolt
21	3	013-5201-00	3/8" Flange Nut
22	3	018-4703-00	5/16" x 1 1/4" Carriage Bolt
23	3	018-6020-00	5/8" x 1 1/2" Grade 8 Bolt
24	12	018-5040-00	3/8" x 1 1/4" Hex Bolt
25	12	013-6014-00	3/8-16 Hex Nuts Zinc
26	12	019-5037-00	3/8" Lock Washer
27	3	018-6019-00	1/2"-20 x 1 1/2 - Grade 5 Fine Thread Bolt
28	3	019-6020-00	1/2 Belleville Washer
29	4	047-6047-98	3- Link Adjustable Deck Hange
30	2	018-6037-00	1/2-13X 2-1/4 GR Hex Bolts
31	2	018-1090-00	1/2" x 5 1/2" Bolt
32	1	018-1050-00	1/2 x 2" Carriage Bolt
33	1	019-2040-00	1/2" Flat Washer
34	1	018-5311-00	5/8" x 4" Hex Bolt
35	1	013-5301-00	5/8" Nylock (1/2 Jam)
36	2	019-6017-00	.635 ID Plastic Washer
37	4	045-6043-00	5/16" Knob
38	2	014-6010-00	Pulley Cover
39	6	018-3003-00	1/2" x 1 1/4 Carriage Bolt
40	3	038-0001-00	54" Deck Fusion Blade For Outlaw
41	3	030-0050-00	5/16 Set Screw
42	3	019-4807-00	5/8" Lock Washer
43	2	019-6042-00	.360 ID Plastic Washer
44	1	039-6945-98	Deck Idler Assembly Componets 2,17,55,57,60
45	6	019-8054-00	.505 Nylon Spacer
46	4	013-5300-00	1/2" Flange Nut
47	1	041-1650-00	B165 Belt-60 54" deck Outlaw
48	1	018-5019-00	1/2" x 4" Bolt (Grade 8)
49	1	025-5339-00	1 3/4" Pulley Spacer
50	3	042-6030-00	1/4" x 1" Key
51	6	037-8001-00	Double Bearing For Spindle
52	4	032-5057-00	Flange for Lower Deck Arm
53	4	032-5056-00	Flange Bushing for Deck Arm Upper
54	6	018-0010-00	Deck Wheel Bolt-2011 Outlaw
55	1	025-5203-00	3/4 OD x 1/2 ID x 3\4 Length
56	1	028-6060-00	Panhard Linkage Bar
57	2	033-5000-00	5 3/4" Deck Idler Pulley
58	3	019-5007-00	1/2" Lock Washer
59	2	013-8049-00	5/16" Nylon Flange Nut
60	1	018-7016-00	1/2-13 x GR 5 Hex Bolt Zinc
61	2	018-0022-00	1/2-13x2 Grade 8 Hex Bolt

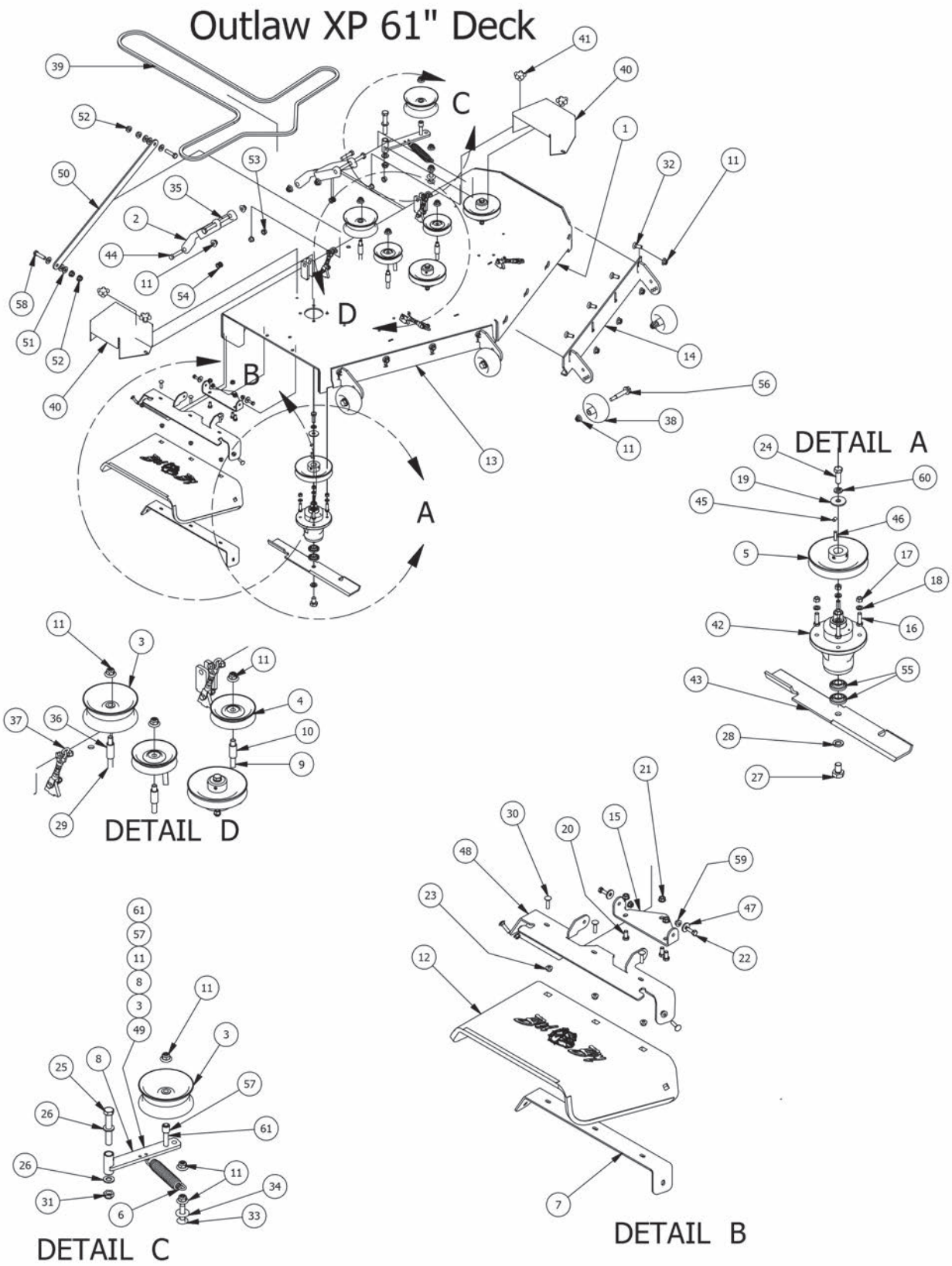
Outlaw XP 61" Deck
A
B
C
D
DETAIL A
DETAIL B
DETAIL C
DETAIL D

Outlaw XP 61" Deck			
ITEM	QTY	PART NUMBER	DESCRIPTION
1	1	060-6100-00	61" Outlaw (Deck Only)
2	2	031-6010-00	Deck Arm Assembly
3	2	033-5000-00	5 3/4" Deck Idler Pulley
4	2	033-6001-00	4 3/4" Idler Pulley
5	3	033-6004-00	6 1/4" Drive Pulley
6	1	034-2009-00	2009 Deck/Pump Idler Spring
7	1	039-4863-00	60" Discharge Lower Bracket
8	1	039-6945-00	Deck Idler Bracket
9	2	018-2018-00	1/2 x 3 1/2 Flange Bolt Grade 8
10	2	025-5338-00	Pulley Spacer
11	24	013-8050-00	1/2-13 Nylon Insert Flange Nut
12	1	210-6005-00	Rubber Discharge Chute
13	1	060-6220-00	61 Outlaw Adjustable Deck Front (Left)
14	1	060-6210-00	61 Outlaw Adjustable Deck Front (Right)
15	1	206-6017-00	Discharge Chute Hanger (deck mounted)
16	12	018-5040-00	3/8" x 1 1/4" Hex Bolt
17	12	013-6014-00	3/8-16 Hex Nuts Zinc
18	12	019-5037-00	3/8 Lockwasher Zinc
19	3	019-6020-00	1/2 Belleville Washer
20	3	018-5250-00	3/8" x 3/4" Hex Bolt
21	3	013-5201-00	3/8" Flange Nut
22	2	018-2007-00	5/16" x 1" Bolt
23	5	013-9002-00	5/16" Flange Nut Zinc W/Serrations
24	3	018-6019-00	1/2"-20 x 1 1/2 - Grade 5 Fine Thread Bolt
25	1	018-5311-00	5/8" x 4" Hex Bolt
26	2	019-6017-00	.635 ID Plastic Washer
27	3	018-6020-00	5/8" x 1 1/2" Grade 8 Bolt
28	3	019-4807-00	5/8" Lock Washer
29	1	018-5019-00	1/2" x 4" Bolt (Grade 8)
30	5	018-4703-00	5/16" x 1 1/4" Carriage Bolt
31	1	013-5301-00	5/8-11 Nylon Insert Jam Half Nut
32	8	018-3003-00	1/2" x 1 1/4 Carriage Bolt
33	1	018-1050-00	1/2 x 2" Carriage Bolt
34	1	019-2040-00	1/2" Flat Washer
35	2	018-1090-00	1/2" x 5 1/2" Bolt
36	1	025-5339-00	1 3/4" Pulley Spacer
37	4	047-6047-98	3- Link Adjustable Deck Hange
38	6	022-1000-00	Deck Wheel
39	1	041-0178-00	B178 Belt For 61 Inch Outlaw
40	2	014-6010-00	Pulley Cover
41	4	045-6043-00	5/16" Knob
42	3	037-8000-50	Double Bearing Spindle
43	3	038-6080-00	61 inch Fusion Blade
44	2	018-6037-00	1/2-13X 2-1/4 GR Hex Bolts
45	3	030-0050-00	5/16 Set Screw
46	3	042-6030-00	1/4" x 1" Key
47	2	019-6042-00	.360 ID Plastic Washer
48	1	039-4864-00	60" Discharge Chute Upper Hanger
49	1	039-6945-98	Deck Idler Assembly-parts of Assembly 3,8,11,57,61
50	1	028-6060-00	Panhard Linkage Bar
51	6	019-8054-00	.505 Nylon Spacer
52	4	013-5300-00	1/2" Flange Nut
53	4	032-5056-00	Flange Bushing For Deck Arm upper
54	4	032-5057-00	Flange for Lower Deck Arm
55	6	037-8001-00	Double Bearing For Spindle
56	6	018-0010-00	Deck Wheel Bolt-2011 Outlaw
57	1	025-5203-00	3/4 OD x 1/2 ID x 3\4 Length
58	2	018-0022-00	1/2-13x2 Grade 8 Hex Bolt
59	2	013-8049-00	5/16" Nylon Flange Nut
60	3	019-5007-00	1/2" Lock Washer
61	1	018-7016-00	1/2-13 x GR 5 Hex Bolt Zinc

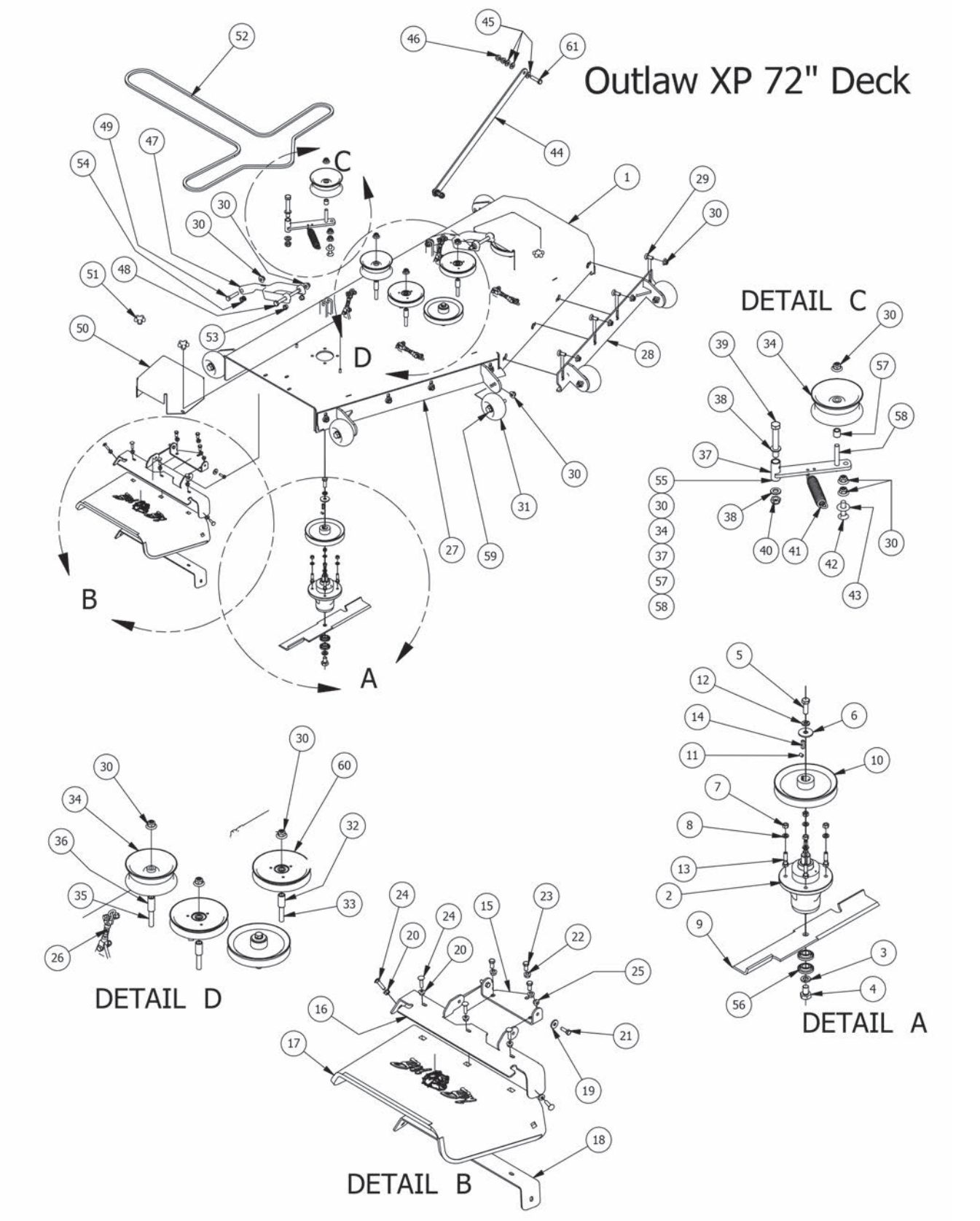
Outlaw XP 72" Deck
DETAIL C
DETAIL D
DETAIL A
DETAIL B
A
B
C
D

Outlaw XP 72" Deck			
ITEM	QTY	PART NUMBER	DESCRIPTION
1	1	060-7230-00	72" Outlaw (Deck Only)
2	3	037-8000-50	Double Bearing Spindle
3	3	019-4807-00	5/8" Lock Washer
4	3	018-6020-00	5/8" x 1 1/2" Grade 8 Bolt
5	3	018-6019-00	1/2"-20 x 1 1/2 - Grade 5 Fine Thread Bolt
6	3	019-6020-00	1/2 Belleville Washer
7	12	013-6014-00	3/8-16 Hex Nuts Zinc
8	12	019-5037-00	3/8 Lockwasher Zinc
9	3	038-7230-00	72" High Lift Fusion Blade
10	3	033-7203-00	7" Deck Pulley
11	3	030-0050-00	5/16 Set Screw
12	3	019-5007-00	1/2" Lock Washer
13	12	018-6012-00	3/8" x 1 1/2" Hex Bolt
14	3	042-6030-00	1/4" x 1" Key
15	1	206-6017-00	Discharge Chute Hanger (deck mounted)
16	1	039-4864-00	60" Upper Discharge Chute Bracket
17	1	210-6005-00	Rubber Discharge Chute
18	1	039-4863-00	60" Lower Discharge Bracket
19	2	019-6042-00	.360 ID Plastic Washer
20	5	013-9002-00	5/16" Flange Nut Zinc W/Serrations
21	2	018-2007-00	5/16" x 1" Bolt
22	3	013-5201-00	3/8" Flange Nut
23	3	018-5250-00	3/8" x 3/4" Hex Bolt
24	5	018-4703-00	5/16" x 1 1/4" Carriage Bolt
25	2	013-8049-00	5/16" Nylon Flange Nut
26	4	047-6047-98	3- Link Adjustable Deck Hange
27	1	060-7211-00	72" Deck Adustable Front (Right)
28	1	060-7210-00	72" Deck Adjustable Front (Left)
29	8	018-3003-00	1/2" x 1 1/4 Carriage Bolt
30	24	013-8050-00	1/2-13 Nylon Insert Flange Nut
31	6	022-1000-00	Deck Wheel
32	2	025-5338-00	.502 ID X .75 OD X 1.500 Leng
33	2	018-2018-00	1/2 x 3 1/2 Flange Bolt Grade 8
34	2	033-5000-00	5 3/4" Deck Idler Pulley
35	1	018-5019-00	1/2" x 4" Bolt (Grade 8)
36	1	025-5339-00	1 3/4" Pulley Spacer
37	1	039-6945-00	Deck Idler Bracket
38	2	019-6017-00	.635 ID Plastic Washer
39	1	018-5311-00	5/8" x 4" Hex Bolt
40	1	013-5301-00	5/8-11 Nylon Insert Jam Half Nut
41	1	034-2009-00	2009 Deck/Pump Idler Spring
42	1	018-1050-00	1/2 x 2" Carriage Bolt
43	1	019-2040-00	1/2" Flat Washer
44	1	028-6060-00	Panhard Linkage Bar
45	6	019-8054-00	.505 Nylon Spacer
46	4	013-5300-00	1/2" Flange Nut
47	2	031-6010-00	Deck Arm Assembly
48	2	018-1090-00	1/2" x 5 1/2" Bolt
49	2	018-6037-00	1/2-13X 2-1/4 GR Hex Bolts
50	2	014-7204-00	72 Spindle Cover
51	4	045-6043-00	5/16" Knob
52	1	041-0202-00	B202 Belt for 72" Outlaw
53	4	032-5056-00	Flange Bushing For Deck Arm upper
54	4	032-5057-00	Flange for Lower Deck Arm
55	1	039-6945-98	Deck Idler Complete Assembly- Componets 30,34,37,57,58
56	6	037-8001-00	Double Bearing For Spindle
57	1	025-5203-00	3/4 OD x 1/2 ID x 3\4 Length
58	1	018-7016-00	1/2-13 x GR 5 Hex Bolt Zinc
59	6	018-0010-00	Deck Wheel Bolt-2011 Outlaw
60	2	033-7201-00	5-3/4 Idler Pulley 72" Decks only
61	2	018-0022-00	1/2-13x2 Grade 8 Hex Bolt

037-8000-50
Double Bearing Spindle

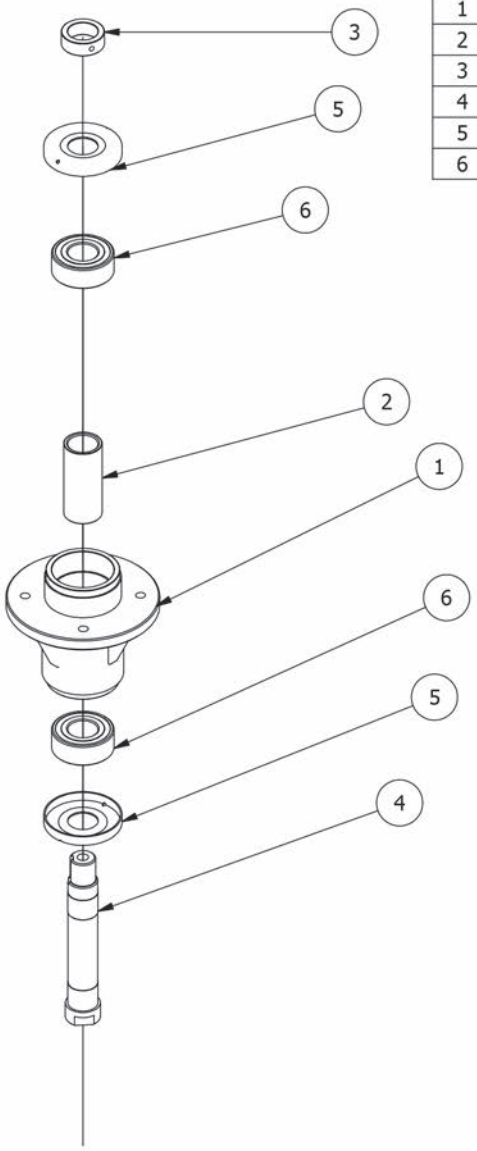

037-8000-50			
ITEM	QTY	PART NUMBER	DESCRIPTION
1	1	037-8005-50	Aluminum Spindle Housing
2	1	037-8003-00	Tube Spacer Double Bearing Spindle
3	1	037-9050-00	Collar Spacer - Top of Spindle
4	1	037-6026-00	Short Spindle Shaft w/Locking
5	2	037-8002-00	Dust Cover
6	2	037-8001-00	Double Bearing for spindle

091-1106-00
852cc Decal

091-1107-00
993cc Decal

091-0919-00
Armor Decal

091-0904-00
54" Decal

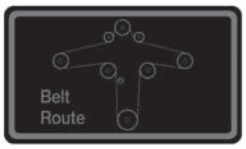

091-3309-00
Deck Belt Route Decal

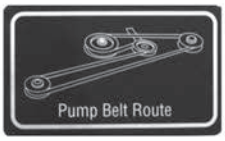

091-3017-00
Pump Belt Route Decal

091-0902-00
Logo Decal Floorboard

091-0917-00
61" Decal

091-1100-00
Outlaw Cluster

091-3012-00
Danger Decal- Spindle/Discharge

091-1020-00
Hydraulic tank

091-0918-00
72" Decal

091-1105-00
Outlaw Deck Height Decal

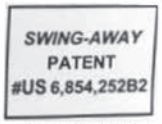

091-3060-00
Swing-Away Patent Decal

091-3150-00
Outlaw Warning Decal

2014 LIMITED WARRANTY
FOR
BAD BOY COMMERCIAL MOWER
(CZT, STAND ON, DIESEL, OUTLAW, OUTLAW EXTREME, and OUTLAWXP)

1. WHAT THIS WARRANTY COVERS, AND FOR HOW LONG:

Bad Boy, Inc. will, at its option, repair or replace, without charge, any part covered by the warranty which is found to be defective in material and/or workmanship within two (2) years* after date of sale to the original retail purchaser unless the product is used for rental purposes, in which case this warranty is limited to ninety (90) days.

The leading edge of the deck shell will be warranted for the entire lifetime of the machine to the original purchaser against defects in materials and workmanship. Labor required to repair or replace the leading edge of the deck shell will be covered by Bad Boy Inc. for two years and at the unit owner's expense during the balance of the lifetime of the machine.

The Bad Boy ZT Series, featuring the **Integrated Zero Turn Transaxle,** used commercially will carry the shorter of a one year or 200 hour warranty, **parts only**. Labor on a Bad Boy ZT Series machine used commercially will not be covered by Bad Boy Inc, and will be the unit owner's responsibility.

Belts are warranted for a period of ninety (90) days against materials or workmanship defects.

Seats are warranted for a period of (6) months against material or workmanship defects.

At Bad Boy, Inc.'s request, customer will make the defective part available for inspection by Bad Boy, Inc. and/or return the defective part to Bad Boy, Inc., **transportation charges prepaid.**

2. WHAT THIS WARRANTY DOES NOT COVER:

A. This warranty does not cover defects caused by depreciation or damage caused by normal wear, accidents, improper maintenance, improper use or abuse of the product, alterations, or failure to follow the instruction contained in the Owner's Manual for operation and maintenance.

B. The customer shall pay any charges for making service calls and/or for transporting the mower to and from the place where the inspection and/or warranty work is performed.
Bad Boy Inc. will not be responsible for the pickup and delivery of a machine for warranty purposes.

C. **Engines** are warranted separately by their respective manufacturer. The available warranties covering this item are furnished with each mower. Bad Boy, Inc. does not assume any warranty obligation, liability or modification for this item, which is covered exclusively by the stated warranty of the respective manufacturers.

D. **Tires, blades, deck anti-scalping wheels** are considered to be consumable wear items and are therefore **not warranted**.

E. **Batteries** are warranted for six months **(free replacement)** from the retail purchase date against materials or workmanship defects. ***The battery warranty must be obtained through the battery manufacturer***.

3. HOW TO OBTAIN SERVICE UNDER THIS WARRANTY:

A. Warranty service can be arranged by contacting the dealer where you purchased the mower or by contacting Bad Boy, Inc. Proof of the date of purchase may be required to verify warranty coverage.

B. **Warranty claims will not be reviewed or paid unless the warranty registration card is received by Bad Boy, Inc. within *30 days of the retail purchase date.***

C. Warranty claims requiring parts returned will be settled upon return of parts to Bad Boy for inspection.

4. WARRANTY LIMITATION:

A. **THERE IS NO OTHER EXPRESS WARRANTY. ANY WARRANTY THAT MAY BE IMPLIED FROM THIS PURCHASE INCLUDING MERCHANTABILITY AND FITNESS FOR A PARTICULAR PURPOSE IS HEREBY LIMITED TO THE DURATION OF THIS WARRANTY AND TO THE EXTENT PERMITTED BY LAW ANY AND ALL IMPLIED WARRANTIES ARE EXCLUDED.** Some states do not allow limitations on how long an implied warranty lasts, so the above limitations may not apply to you.

B. **BAD BOY, INC. WILL NOT BE LIABLE FOR ANY INCIDENTAL, CONSEQUENTIAL, OR SPECIAL DAMAGES AND/OR EXPENSES IN CONNECTION WITH THE PURCHASE OR USE OF THE MOWER.** Some states do not allow the exclusion or limitation of incidental or consequential damages, so the above limitation(s) or exclusion(s) may not apply to you.

C. Only the warranty expressed in this limited warranty shall apply and no dealer, distributor, or individual is authorized to amend, modify, or extend this warranty in any way. Accordingly, additional statements such as dealer advertising or presentations, whether oral or written, do not constitute warranties by Bad boy, Inc., and should not be relied on.

D. This warranty extends only to turf equipment operated under normal conditions and properly serviced and maintained. The warranty expressly does not cover (i) any defects, damage or deterioration due to normal use, wear and tear, or exposure; (ii) normal maintenance services such as oil change, cleaning, lubrication, adjustment; (iii) replacement of services, items, such as oil, lubricants, spark plugs, belts, rubber hoses or other items subject to normal service replacement; (iv) damage or defects arising out of or relating to misuse, neglect, alteration, negligence or accident; (v) repair or replacement arising from operation of or use of the turf equipment which is not in accordance with operating instructions as specified in the operator's manual or other operational instructions provided by Bad Boy Inc.; (vi) repair or replacement arising as a result of any operation from turf equipment that has been altered or modified so as to, indetermination of Bad Boy, Inc., adversely affect the operation, performance or durability of the equipment or that has altered, modified or affected the turf equipment so as to change the intended use of the product; (vii) repair or replacement necessitated by use of parts, accessories or supplies, including gasoline, oil or lubricants, incompatible with the turf equipment or other than as recommended in the operator's manual or other operational instructions provided by Bad Boy, Inc.; (viii) repairs or replacements resulting from parts or accessories which have adversely affected the operation, performance or durability of the turf equipment; or (ix) damage or defects due to or arising out of repair of turf equipment by person or persons other than an authorized Bad Boy, Inc., service dealer or the installation of parts other than genuine Bad Boy, Inc., recommended parts.
As a condition to this warranty, customer shall have read the operator's manual and shall have returned to Bad Boy, Inc., within the prescribed time, the enclosed warranty registration card.

E. This warranty gives you specific legal rights, and you may also have other rights, which vary from state to state.

Bad Boy, Inc.
102 Industrial Drive
Batesville, AR 72501
1.866.622.3269

www.badboymowers.com

Technical Support:

James Russell ..... james.russell@badboymowers.com

Warranty:

Jack Vaughn ..... jack.vaughn@badboymowers.com

Parts:

Tim Tosh ..... tim.tosh@badboymowers.com
Robert Patterson ..... robert.patterson@badboymowers.com

Cut and Mail or Fill Out Online under 'Owners' at www.badboymowers.com

WARRANTY REGISTRATION

Full Name _____

Address _____

City _____

State _____ Zip _____

SERIAL # ☐☐☐☐☐☐☐☐☐☐☐☐☐☐☐☐

Purchase Date _____ Telephone _____

Purchased From _____

"I certify that I have been properly instructed on operating this machine."

_____

For additional information, please see us at

www.badboymowers.com

Bad Boy, Inc.
102 Industrial Drive
Batesville, Arkansas 72501
(870) 698-0090

Cut and Mail or Fill Out Online under 'Owners' at www.badboymowers.com

Place Stamp Here

POST OFFICE WILL NOT DELIVER WITHOUT POSTAGE

BAD BOY MOWERS
102 Industrial Drive
Batesville, AR 72501